231 WATERPROOF DIAL INDICATOR

Certificate | IP54 | Jeweled | Shock proof

- IP54 dust/waterproof
- Graduation:0.01mm
- Jeweled bearing



unit: mm

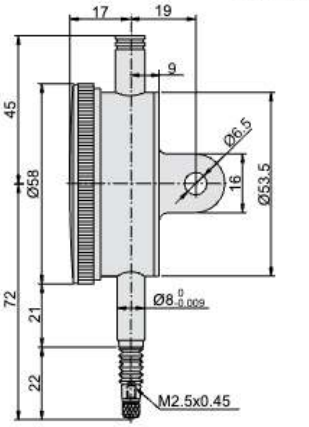

Styli(optional)



Application



Code	Range	Accuracy(f_{ges})	Hysteresis(f_u)	Range/rev	Dial reading
231-010-11	10mm	17μm	3μm	1mm	0-100

With manufacturer inspection certificate

231 WATERPROOF DIAL INDICATOR



- Meet DIN878
- Graduation:0.01mm
- IP54 dust/waterproof
- Jeweled bearing
- Supplied with lug and flat back

Styli**(optional)**



Series 270

Application





unit: mm

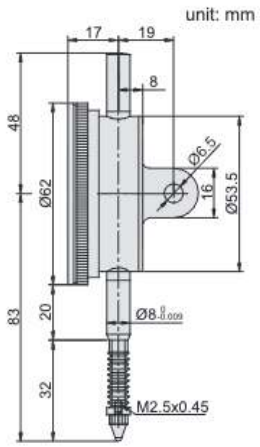

Code	Range	Accuracy	Hysteresis	Range/rev	Dial reading
231-010-21	10mm	17μm	3μm	1mm	0-100

With manufacturer inspection certificate