SERIES 281 MAGNETIC STAND

- For dial/digital indicators and dial test indicators
- V-block base

Application



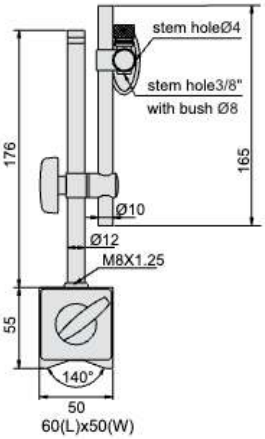

281-060-02



281-060-02



281-080-01

unit: mm

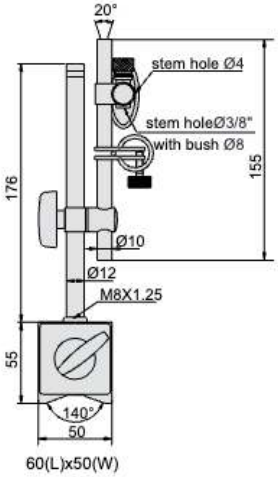

281-060-01

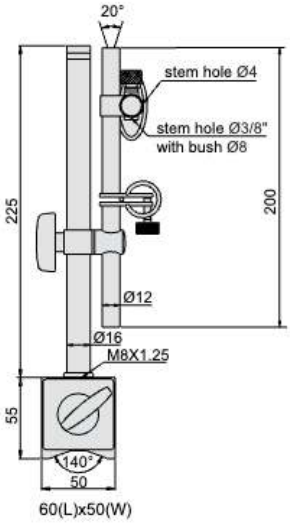

281-080-01

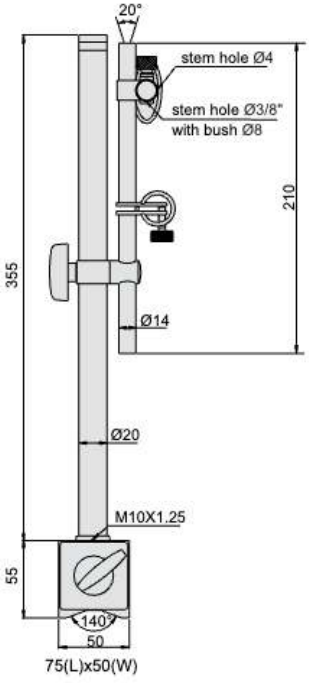

281-100-01

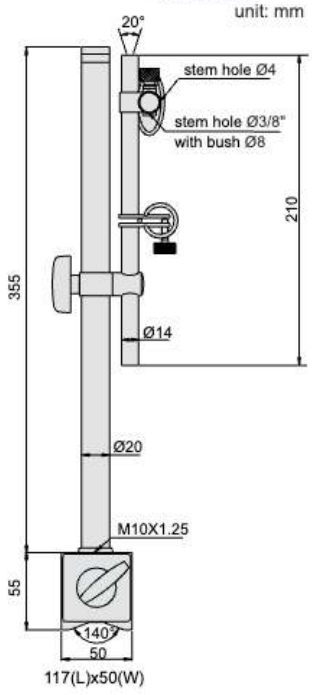

281-130-01

Code	Stem hole	Magnetic force	Fine adjustment
281-060-01	Ø8mm, Ø4mm, 3/8"	60kgf	With
281-060-02	Ø8mm, Ø4mm, 3/8"	60kgf	Without
281-080-01	Ø8mm, Ø4mm, 3/8"	80kgf	With
281-100-01	Ø8mm, Ø4mm, 3/8"	100kgf	With
281-130-01	Ø8mm, Ø4mm, 3/8"	130kgf	With