SERIES 336 SHEET METAL MICROMETER

- Deep frame suitable for sheet metal, paper and plastic
- Graduation 0.01mm
- Ratchet stop
- Carbide measuring faces

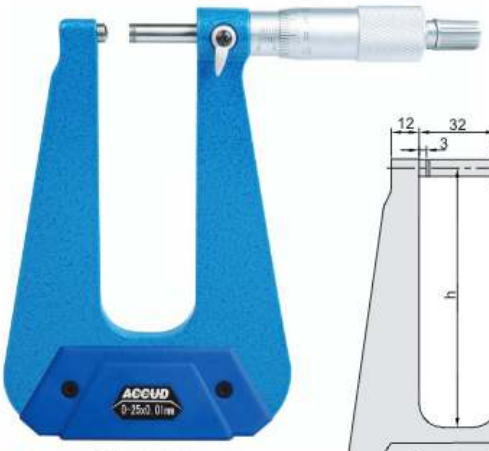

336-001-01

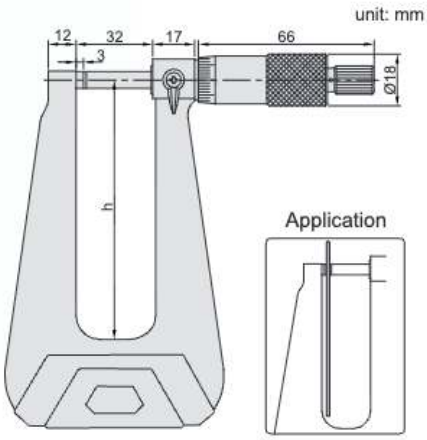

Code	Range	Accuracy	Type	h
336-001-11	0-25mm	4μm	A	50
336-001-21	0-25mm	4μm	B	50
336-001-31	0-25mm	4μm	C	50
336-001-01	0-25mm	7μm	B	100
336-001-02	0-25mm	7μm	A	155
336-001-03	0-25mm	7μm	B	155
336-001-04	0-25mm	7μm	C	155
336-001-05	0-25mm	10μm	B	310

