Point Micrometers

Series 112

This Point Micrometer features a pointed anvil and spindle, and offers the following benefits:

- Its pointed anvil and spindle has a choice of included angle, ending in small-radius contact points.
- You can use it to measure grooves, steps and similar.



112-201

Specifications

Measuring face	Carbide pointed or hardened steel spindle and anvil, measuring point radius 0,3 mm
Measuring spindle	With spindle lock, ø 6,35 mm, spindle pitch 0,5 mm
Scale	Thimble and sleeve satin chrome finish ø18 mm
Delivered	Including box, setting standard (from 25 mm upward), key

Metric — Carbide tip

No.	Range [mm]	Graduation	Max. Permissible Error E MPE	Tip	Measuring force [N]	L [mm]	a [mm]	b [mm]	c [mm]	Mass [g]
112-165	0–25	0,01 mm	±3 µm	15°	3-8	55,3	12,8	10	38	205
112-213	0–25	0,01 mm	±3 µm	30°	3-8	55,3	12,8	10	38	205
112-166	25–50	0,01 mm	±3 µm	15°	3-8	80,3	12,8	12	49	305
112-214	25–50	0,01 mm	±3 µm	30°	3-8	80,3	12,8	12	49	305
112-167	50–75	0,01 mm	±3 µm	15°	3-8	105,3	12,8	14	60	370
112-215	50–75	0,01 mm	±3 µm	30°	3-8	105,3	12,8	14	60	370
112-168	75–100	0,01 mm	±4 µm	15°	3-8	132,8	15,3	17	79	500
112-216	75–100	0,01 mm	±4 µm	30°	3-8	132,8	15,3	17	79	500

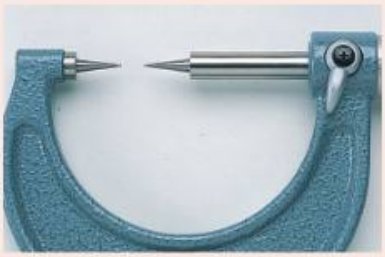

Tip angle : 15°

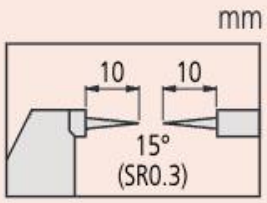

Metric — Hardened steel tip

No.	Range [mm]	Graduation	Max. Permissible Error E MPE	Tip	Measuring force [N]	L [mm]	a [mm]	b [mm]	c [mm]	Mass [g]
112-153	0–25	0,01 mm	±3 µm	15°	3-8	55,3	12,8	10	38	205
112-201	0–25	0,01 mm	±3 µm	30°	3-8	55,3	12,8	10	38	205
112-154	25–50	0,01 mm	±3 µm	15°	3-8	80,3	12,8	12	49	305
112-202	25–50	0,01 mm	±3 µm	30°	3-8	80,3	12,8	12	49	305
112-155	50–75	0,01 mm	±3 µm	15°	3-8	105,3	12,8	14	60	370
112-203	50–75	0,01 mm	±3 µm	30°	3-8	105,3	12,8	14	60	370
112-156	75–100	0,01 mm	±4 µm	15°	3-8	132,8	15,3	17	79	500
112-204	75–100	0,01 mm	±4 µm	30°	3-8	132,8	15,3	17	79	500



Tip angle : 30°

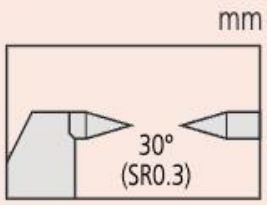

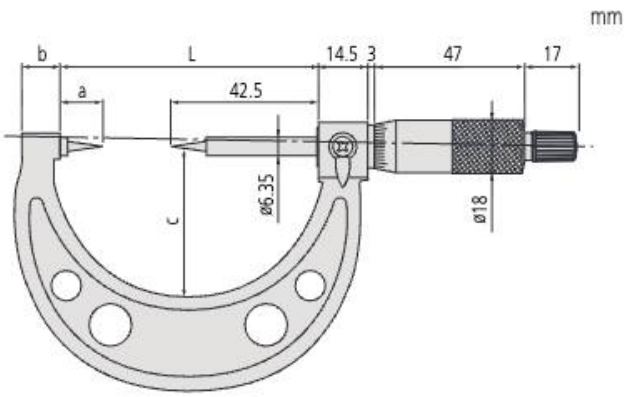

All products to be sold to commercial customers.
Product illustrations are without obligation. Product descriptions, in particular any and all technical specifications, are only binding when explicitly agreed upon.