Limit Micrometers

Specifications

Measuring face	Carbide-tipped with chamfer micro-lap finish
Measuring spindle	With spindle lock, ø 6,35 mm, spindle pitch 0,5
Scale	Thimble and sleeve satin chrome finish ø18 mm
Delivered	Including box, setting standard (from 25 mm upward), key



Series 113

This Limit Micrometer offers the following benefits:

- Spindle and Anvil with chamfered edge.
- You can use it as a GO/±NG gauge by setting the upper and lower limits of dimension.



113-102

Metric

No.	Range [mm]	Graduation	Max. Permissible Error E MPE	Variation in length V MPE	Measuring force [N]	L [mm]	a [mm]	c [mm]	Mass [g]
113-102	0–25	0,01 mm	±3 µm	3 µm	5-10	29,3	15	23	340
113-103	25–50	0,01 mm	±3 µm	3 µm	5-10	54,3	15	37	380

mm

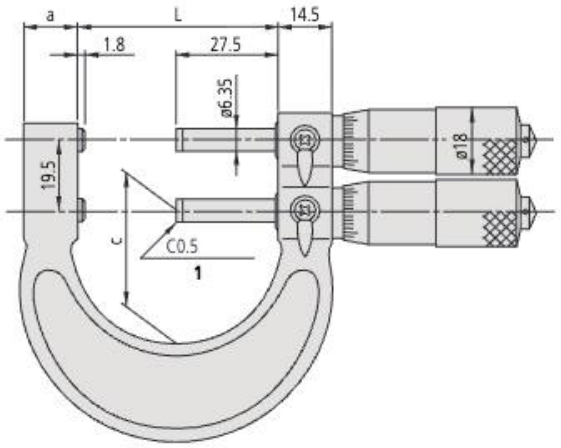

All products to be sold to commercial customers.
Product illustrations are without obligation. Product descriptions, in particular any and all technical specifications, are only binding when explicitly agreed upon.

Mitutoyo