# Micrometers Interchangeable Anvil Type

## Series 117

This Micrometer Interchangeable Anvil Type lets you measure a range of different features.
It offers the following benefits:

- Measures tubing thickness, shoulder edge distance, rivet head height, etc., with interchangeable anvils (flat anvil, rod anvil, V-anvil).




117-101

Metric

| No. | Range [mm] | Graduation | Max. Permissible Error E MPE | Variation in length V MPE | Flatness | Measuring force [N] | Content of Set | Mass [g] |
|---|---|---|---|---|---|---|---|---|
| 117-101 | 0–25 | 0,01 mm | ±4 µm | 3 µm | 0,6 µm (spindle), 2 µm (anvil) | 5-10 | Anvils 201217, 201216 | 255 |
| 117-102 | 25–50 | 0,01 mm | ±4 µm | 3 µm | 0,6 µm (spindle), 2 µm (anvil) | 5-10 | Anvils 201379, 201216 | 320 |

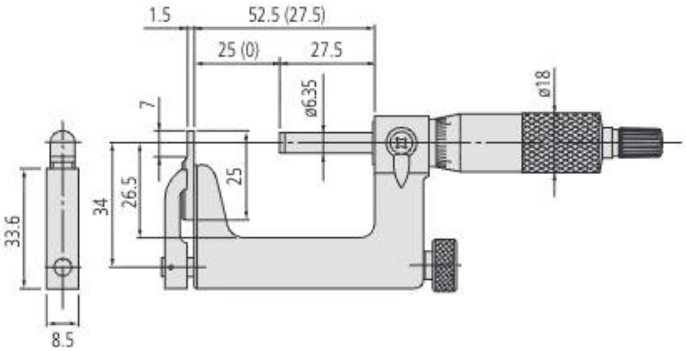


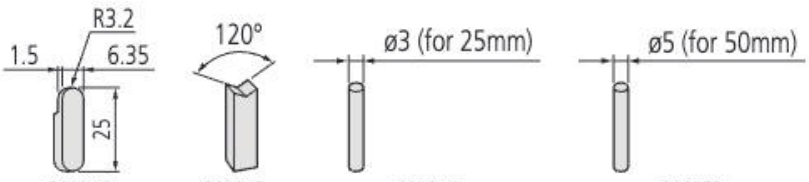


**201216** Flat anvil

**201218** V-anvil

**201217** Cylindrical anvil

**201379** Cylindrical anvil

### Specifications

| | |
|---|---|
| Measuring face | Carbide-tipped spindle, hardened anvil |
| Measuring spindle | With spindle lock, ø 6,35 mm, spindle pitch 0,5 mm |
| Scale | Thimble and sleeve satin chrome finish ø18 mm |
| Delivered | Including box, setting standard (from 25 mm upward), key, anvils |

### Optional accessories

| No. | Description |
|---|---|
| 950758 | Round Base for Series 117, for 0-25mm |
| 201218 | V-Anvil |

### Consumable spares

| No. | Description |
|---|---|
| 201217 | Cylindrical Anvil 3mm |
| 201379 | Cylindrical Anvil 5mm |
| 201216 | Flat Anvil |

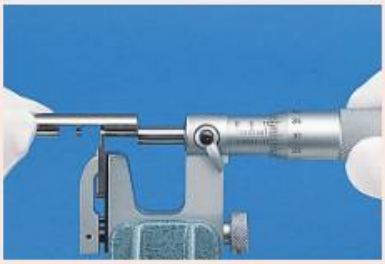



950758 with micrometer


All products to be sold to commercial customers.
Product illustrations are without obligation. Product descriptions, in particular any and all technical specifications, are only binding when explicitly agreed upon.