Screw Thread Micrometers

Series 125

This Screw Thread Micrometer has a fixed anvil, offering the following benefits:

- Fixed anvil type.
- It directly indicates screw pitch diameter, meaning no need for calculation.



125-103

Specifications

Measuring face	Hardened steel, fixed anvil/spindle
Measuring spindle	With spindle lock, ø 6,35 mm, spindle pitch 0,5 mm
Scale	Thimble and sleeve satin chrome finish ø18 mm
Delivered	Including box, setting standard 60° (from 25 mm upward), key

Optional accessories

No.	Description
156-105-10	Micrometer Stand, 45° Angle Type, for Micrometer 0-50mm/0-2"
156-101-10	Micrometer Stand, Adjustable Angle Type, for Micrometer 0-100mm/0-4"



Metric

No.	Range [mm]	Graduation	Max. Permissible Error E MPE	Thread to be measured (Metric/ Unified)	Tip angle	L [mm]	a [mm]	Mass [g]
125-101	0–25	0,01 mm	±6 µm	0,4-0,5 mm / 64-48 TPI	60°	37,2	25	200
125-102	0–25	0,01 mm	±6 µm	0,6-0,9 mm / 44-28 TPI	60°	37,2	25	200
125-103	0–25	0,01 mm	±6 µm	1-1,75 mm / 24-14 TPI	60°	37,2	25	200
125-104	0–25	0,01 mm	±6 µm	2-3 mm / 13-9 TPI	60°	37,2	25	200
125-105	0–25	0,01 mm	±6 µm	3,5-5 mm / 8-5 TPI	60°	37,2	25	200
125-106	25–50	0,01 mm	±6 µm	0,4-0,5 mm / 64-48 TPI	60°	62,2	32	250
125-107	25–50	0,01 mm	±6 µm	0,6-0,9 mm / 44-28 TPI	60°	62,2	32	250
125-108	25–50	0,01 mm	±6 µm	1-1,75 mm / 24-14 TPI	60°	62,2	32	250
125-109	25–50	0,01 mm	±6 µm	2-3 mm / 13-9 TPI	60°	62,2	32	250
125-110	25–50	0,01 mm	±6 µm	3,5-5 mm / 8-5 TPI	60°	62,2	32	250
125-111	50–75	0,01 mm	±6 µm	0,6-0,9 mm / 44-28 TPI	60°	87	49	260
125-112	50–75	0,01 mm	±6 µm	1-1,75 mm / 24-14 TPI	60°	87	49	260
125-113	50–75	0,01 mm	±6 µm	2-3 mm / 13-9 TPI	60°	87	49	260
125-114	50–75	0,01 mm	±6 µm	3,5-5 mm / 8-5 TPI	60°	87	49	260
125-115	50–75	0,01 mm	±6 µm	5,5-7 mm / 4,5-3,5 TPI	60°	87	49	260
125-116	75–100	0,01 mm	±7 µm	0,6-0,9 mm / 44-28 TPI	60°	112	63	330
125-117	75–100	0,01 mm	±7 µm	1-1,75 mm / 24-14 TPI	60°	112	63	330
125-118	75–100	0,01 mm	±7 µm	2-3 mm / 13-9 TPI	60°	112	63	330
125-119	75–100	0,01 mm	±7 µm	3,5-5 mm / 8-5 TPI	60°	112	63	330
125-120	75–100	0,01 mm	±7 µm	5,5-7 mm / 4,5-3,5 TPI	60°	112	63	330

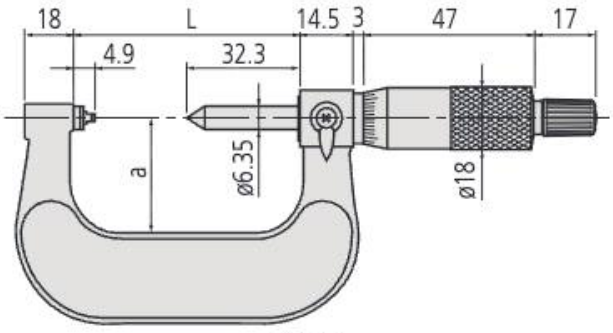

0-50 mm

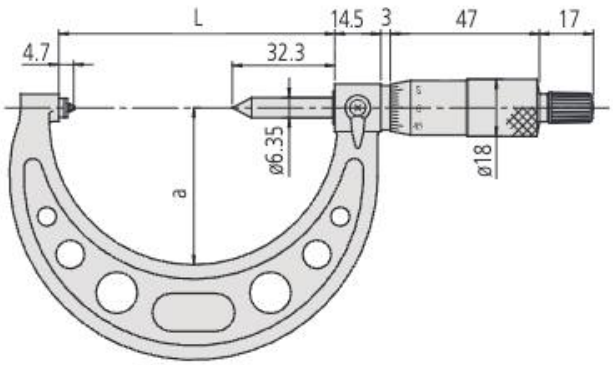

50-100 mm

All products to be sold to commercial customers.
Product illustrations are without obligation. Product descriptions, in particular any and all technical specifications, are only binding when explicitly agreed upon.