# Hub Micrometers

## Series 147

This Hub Micrometer is designed with a very small throat depth, allowing you to measure hub thickness, shouldered features inside a bore and bearing bushings.



147-301

**Specifications**

| | |
|---|---|
| Measuring face | Carbide-tipped, micro-lap finish |
| Measuring spindle | ø6,35 mm, spindle pitch 0,5 mm |
| Scale | Thimble and sleeve satin chrome finish ø18 mm |
| Delivered | Including box, setting standard (from 25 mm upward), key |



Metric

| No. | Range [mm] | Graduation | Max. Permissible Error E MPE | Variation in length V MPE | Measuring force [N] | L [mm] |
|---|---|---|---|---|---|---|
| 147-301 | 0–25 | 0,01 mm | ±2 µm | 3 µm | 5-10 | 0 |
| 147-302 | 25–50 | 0,01 mm | ±2 µm | 3 µm | 5-10 | 25 |
| 147-303 | 50–75 | 0,01 mm | ±2 µm | 3 µm | 5-10 | 50 |
| 147-304 | 75–100 | 0,01 mm | ±3 µm | 3 µm | 5-10 | 75 |

| No. | A [mm] | B [mm] | C [mm] | H [mm] | Mass [g] |
|---|---|---|---|---|---|
| 147-301 | 6 | 8,5 | 13,5 | 17,5 | 135 |
| 147-302 | 6,5 | 11 | 14 | 20,5 | 150 |
| 147-303 | 6,5 | 11 | 13 | 20,5 | 170 |
| 147-304 | 6,5 | 11 | 13 | 20,5 | 185 |

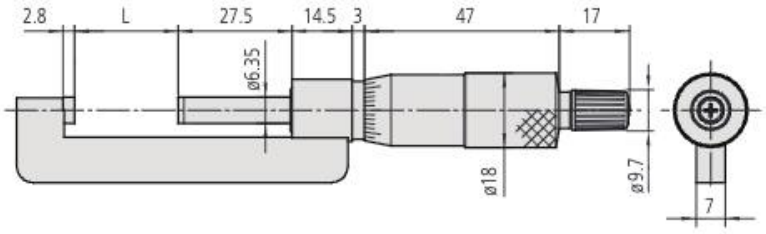


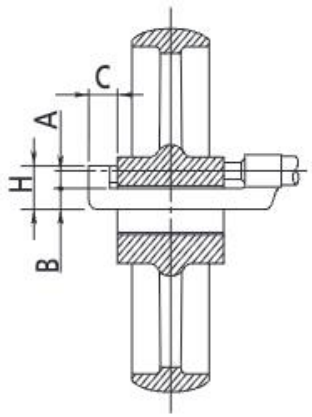



All products to be sold to commercial customers.
Product illustrations are without obligation. Product descriptions, in particular any and all technical specifications, are only binding when explicitly agreed upon.