Can Seam Micrometers

Specifications

Measuring face	Hardened steel
Scale	Thimble and sleeve satin chrome finish ø13 mm
Delivered	Including box, key

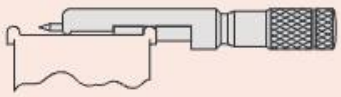

147-103
For steel cans

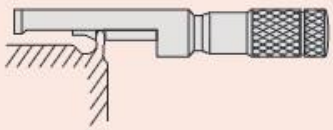

147-105
For aluminium cans

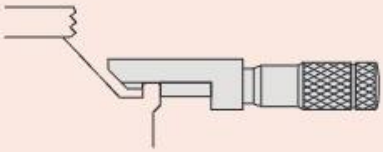

147-202
For spray cans

Series 147

This Can Seam Micrometer allows you to measure different types of can seams. It offers the following benefits:

- Designed to measure the width, height and depth of can seams.
- Three types are available, for steel, aluminium and spray cans.



147-103



147-105



147-202

Metric

No.	Range [mm]	Graduation	Max. Permissible Error E MPE	Remarks	Mass [g]
147-103	0–13	0,01 mm	±3 µm	For steel cans	65
147-105	0–13	0,01 mm	±3 µm	For aluminium cans	65
147-202	0–13	0,01 mm	±3 µm	For spray cans	65

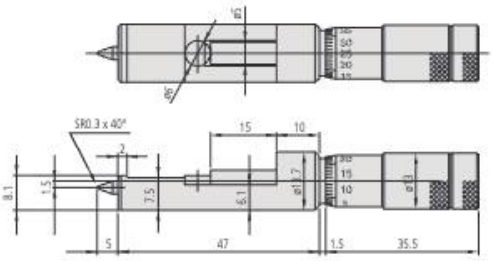

147-103

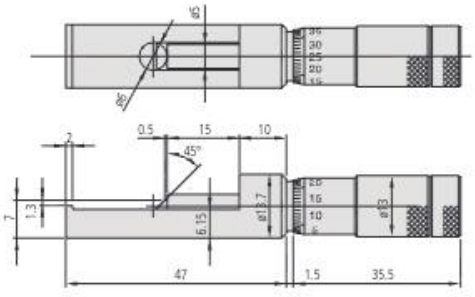

147-105

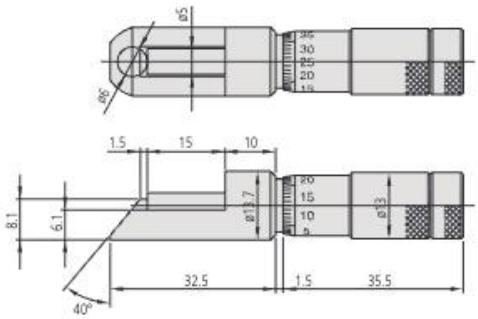

147-202

All products to be sold to commercial customers.
Product illustrations are without obligation. Product descriptions, in particular any and all technical specifications, are only binding when explicitly agreed upon.

Mitutoyo