Fine Spindle Feed 0,25 mm / rev Micrometer Heads 6,5 mm and 13 mm Range

Series 148 - Fine spindle feed of 0,25/rev

These micrometer heads are a standard, small-sized type with a 6,5 mm and 13 mm measuring range.
They offer the following benefits:

- Fine spindle feed of 0,25 mm/rev for fine adjustment.

Specifications

Measuring face	Hardened steel (>60 HRC)



148-132-10



148-133-10



148-322-10



148-323-10

Metric

No.	Range [mm]	Graduation	Max. Permissible Error E MPE	Spindle end	Spindle pitch [mm]	Stem Ø [mm]	Stem	Fixture thickness for clamp nut [mm]	Mass [g]
148-132-10	0 - 13	0,01 mm	±2 µm	Spherical (SR4)	0,25	9,5	Plain		30
148-133-10	0 - 13	0,01 mm	±2 µm	Spherical (SR4)	0,25	9,5	w/ clamp nut	6	35
148-322-10	0 - 6,5	0,01 mm	±2 µm	Spherical (SR4)	0,25	9,5	Plain		30
148-323-10	0 - 6,5	0,01 mm	±2 µm	Spherical (SR4)	0,25	9,5	w/ clamp nut	6	35

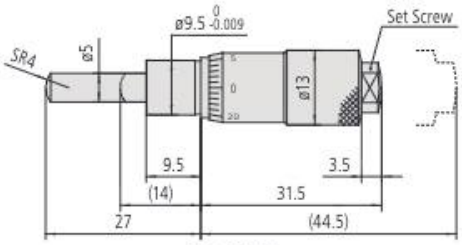

148-132-10

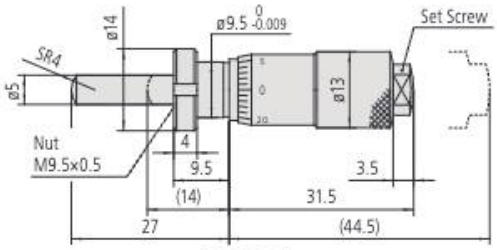

148-133-10

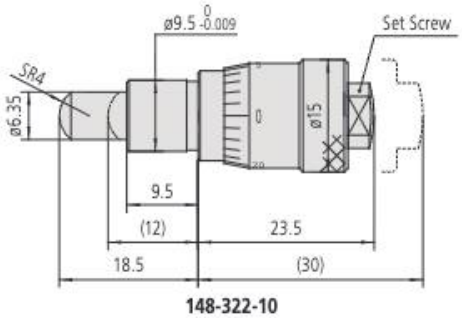

148-322-10

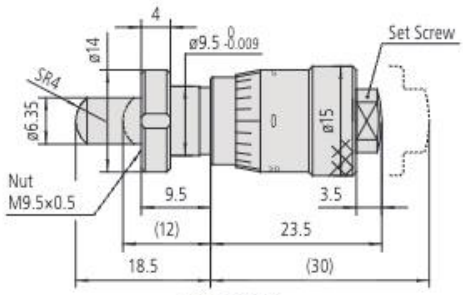

148-323-10
(): with spindle full retracted

All products to be sold to commercial customers.
Product illustrations are without obligation. Product descriptions, in particular any and all technical specifications, are only binding when explicitly agreed upon.