Micrometer Heads 13 mm Range with Spindle Lock

Specifications

Measuring face	Hardened steel (>60 HRC)

Series 148 - Locking screw Type

These micrometer heads feature a locking screw so you can lock the spindle in any position with the knurled locking screw.



148-150-10



148-151-10



148-152-10



148-153-10

Metric

No.	Range [mm]	Graduation	Max. Permissible Error E MPE	Spindle end	Spindle pitch [mm]
148-150-10	0 - 13	0,01 mm	±2 µm	Flat	0,5
148-151-10	0 - 13	0,01 mm	±2 µm	Flat	0,5
148-152-10	0 - 13	0,01 mm	±2 µm	Spherical (SR4)	0,5
148-153-10	0 - 13	0,01 mm	±2 µm	Spherical (SR4)	0,5

No.	Stem Ø [mm]	Stem	Fixture thickness for clamp nut [mm]	Mass [g]
148-150-10	9,5	Plain		40
148-151-10	9,5	w/ clamp nut	6	43
148-152-10	9,5	Plain		40
148-153-10	9,5	w/ clamp nut	6	43

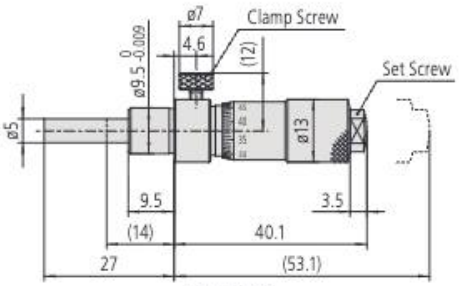

148-150-10

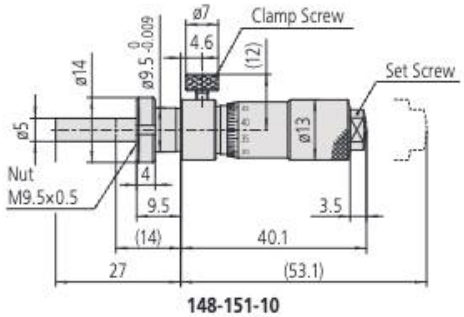

148-151-10

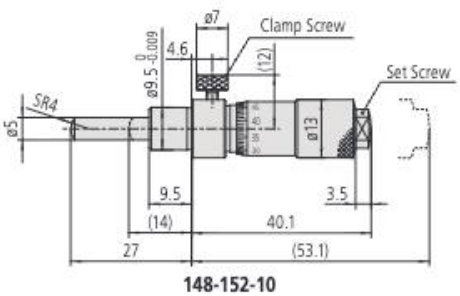

148-152-10

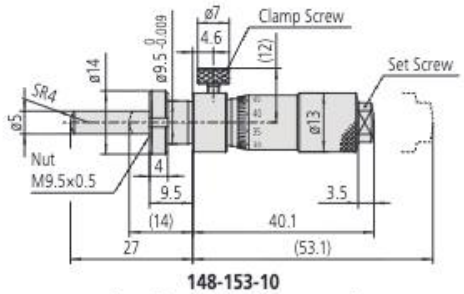

148-153-10
(): with spindle full retracted

All products to be sold to commercial customers.
Product illustrations are without obligation. Product descriptions, in particular any and all technical specifications, are only binding when explicitly agreed upon.

Mitutoyo