Micrometer Heads 15 mm Range

Series 149 - Small standard type with carbide-tipped spindle

This small micrometer head with tungsten carbide measuring surface offers you the following benefits:

- Stem with clamp nut and a flat or spherical spindle end
- Stem with carbide-tipped spindle



149-132-10



149-131-10



149-183-10



149-184-10

Specifications

Measuring face	Carbide-tipped

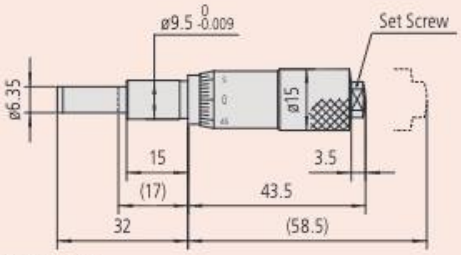

149-132-10

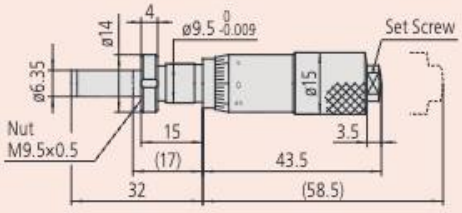

149-131-10

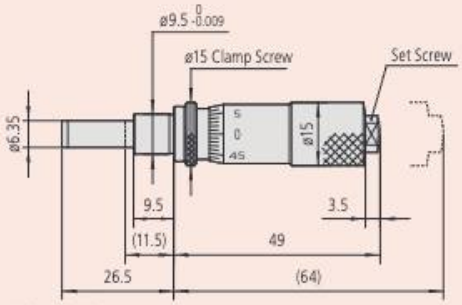

149-183-10

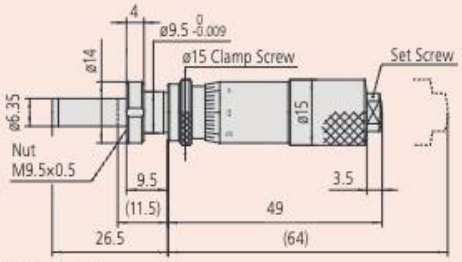

149-184-10



Reverse reading



Spherical spindle end

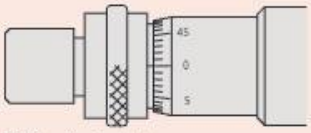

With spindle lock

Metric

No.	Range [mm]	Graduation	Max. Permissible Error E MPE	Spindle end	Spindle pitch [mm]	Stem Ø [mm]	Stem	Fixture thickness for clamp nut [mm]	Special features	Mass [g]
149-132-10	0 - 15	0,01mm	±2 µm	Flat	0,5	9,5	Plain			55
149-131-10	0 - 15	0,01mm	±2 µm	Flat	0,5	9,5	w/ clamp nut	11,5		60
149-801-10	0 - 15	0,01mm	±2 µm	Spherical (SR4)	0,5	9,5	Plain			55
149-802-10	0 - 15	0,01mm	±2 µm	Spherical (SR4)	0,5	9,5	w/ clamp nut	11,5		60
149-821-10	0 - 15	0,01mm	±2 µm	Flat	0,5	9,5	Plain		Reverse reading	55
149-822-10	0 - 15	0,01 mm	±2 µm	Flat	0,5	9,5	w/ clamp nut	11,5	Reverse reading	60

Metric With spindle lock

No.	Range [mm]	Graduation	Max. Permissible Error E MPE	Spindle end	Spindle pitch [mm]	Stem Ø [mm]	Stem	Fixture thickness for clamp nut [mm]	Special features	Mass [g]
149-183-10	0 - 15	0,01mm	±2 µm	Flat	0,5	9,5	Plain			55
149-184-10	0 - 15	0,01mm	±2 µm	Flat	0,5	9,5	w/ clamp nut	6		60
149-803-10	0 - 15	0,01mm	±2 µm	Spherical (SR4)	0,5	9,5	Plain			55
149-804-10	0 - 15	0,01mm	±2 µm	Spherical (SR4)	0,5	9,5	w/ clamp nut	6		60
149-823-10	0 - 15	0,01mm	±2 µm	Flat	0,5	9,5	Plain		Reverse reading	55
149-824-10	0 - 15	0,01mm	±2 µm	Flat	0,5	9,5	w/ clamp nut	6	Reverse reading	60

All products to be sold to commercial customers.
Product illustrations are without obligation. Product descriptions, in particular any and all technical specifications, are only binding when explicitly agreed upon.