Vernier Calipers with Nib Style Jaws

Series 160

These vernier calipers with nib style jaws come with or without fine adjustment.
They offer you the following benefits:

- For the metric only models the top offset vernier scale allows you to directly read the inside dimensions without having to add the nib widths.
- Main scale and vernier scale satin chrome finish gives you high readability.



160-127



160-101

Specifications

Delivered	In a box



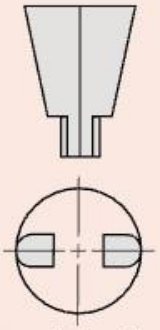

Rounded outside measuring surfaces for measuring inside dimensions

Metric — With fine adjustment

No.	Range [mm]	Graduation	Inside measuring from	Max. Permissible Error E MPE	Max. Permissible Error S MPE	L [mm]
160-127	0–300	0,02 mm	10,1 mm	±0,04 mm	±0,04 mm	445
160-128	0–450	0,02 mm	20,1 mm	±0,05 mm	±0,05 mm	630
160-101	0–600	0,02 mm	20,1 mm	±0,05 mm	±0,05 mm	780
160-104	0–1000	0,02 mm	20,1 mm	±0,07 mm	±0,07 mm	1240

No.	a [mm]	b [mm]	c [mm]	d [mm]	e [mm]	f [mm]	R [mm]	Mass [g]
160-127	95	75	12	20	10	38	5	450
160-128	125	100	18	25	14,8	6	10	1200
160-101	125	100	18	25	14,8	6	10	1400
160-104	172	140	24	32	17	8	10	3500

Metric — Without fine adjustment

No.	Range [mm]	Graduation	Inside measuring from	Max. Permissible Error E MPE	Max. Permissible Error S MPE	L [mm]
160-130	0–450	0,05 mm	20,1 mm	±0,1 mm	±0,1 mm	630
160-131	0–600	0,05 mm	20,1 mm	±0,1 mm	±0,1 mm	780
160-132	0–1000	0,05 mm	20,1 mm	±0,15 mm	±0,15 mm	1240

No.	a [mm]	b [mm]	c [mm]	d [mm]	e [mm]	f [mm]	R [mm]	Mass [g]
160-130	125	100	18	25	14,8	6	10	1100
160-131	125	100	18	25	14,8	6	10	1300
160-132	172	140	24	32	17	8	10	3300

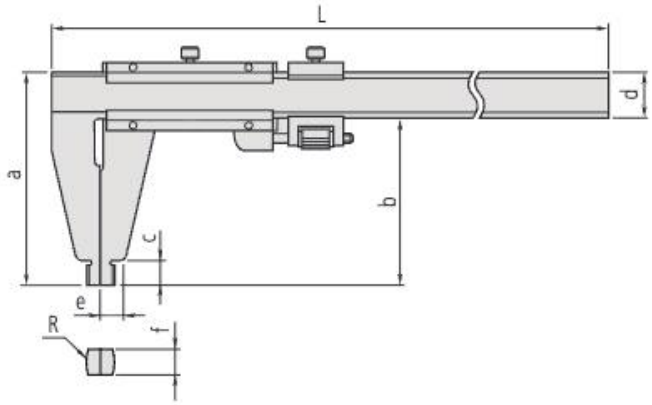

All products to be sold to commercial customers.
Product illustrations are without obligation. Product descriptions, in particular any and all technical specifications, are only binding when explicitly agreed upon.