Disc Micrometers Non-Rotating Spindle Type

Specifications

Measuring face	Hardened steel, micro-lap finish
Measuring spindle	Spindle pitch 0,5 mm
Scale	Thimble and sleeve satin chrome finish ø18 mm
Delivered	Including box, setting standard (from 25 mm upward), key



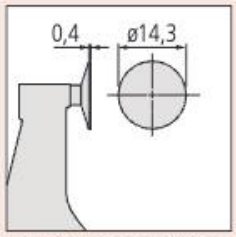

169-101-10 no central recess

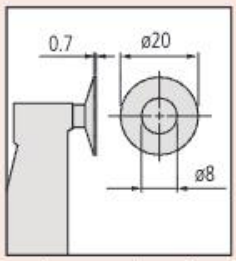

With annular measuring surfaces

Series 169

This Disc Micrometer has a non-rotating spindle and allows you measure a range of different materials.

It offers you the following benefits:

- It features a non-rotating spindle and disc-shaped measuring surfaces.
- Measuring the root tangent length of spur and helical gears
- Measurable range of gear pitch: 0,5-6 module
- It's suitable for measuring materials such as felt, rubber, cardboard and fabric.



169-101-10



169-201-10

Metric

No.	Range [mm]	Graduation	Max. Permissible Error E MPE	Variation in length V MPE	Measuring force	L [mm]	a [mm]	b [mm]	c [mm]	Mass [g]
169-101-10	0–25	0,01mm	±4 µm	3 µm	8,02 N ± 0,8 N	0	13,8	25	5,7	230
169-201-10	0–25	0,01mm	±4 µm	4 µm	3 - 8 N	0	13,8	25	5,7	230
169-202-10	25–50	0,01mm	±4 µm	4 µm	3 - 8 N	25	13,8	32	5,7	280
169-205-10	50–75	0,01mm	±6 µm	6 µm	3 - 8 N	50	12	49	5,5	315
169-207-10	75–100	0,01mm	±6 µm	6 µm	3 - 8 N	75	14	63	5,5	400

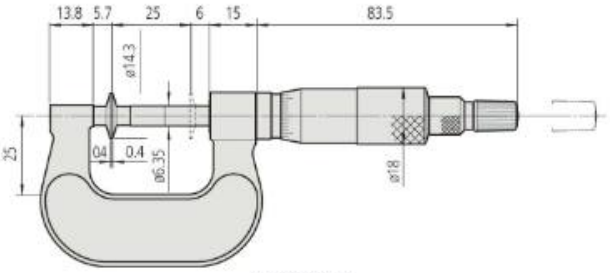

169-101-10

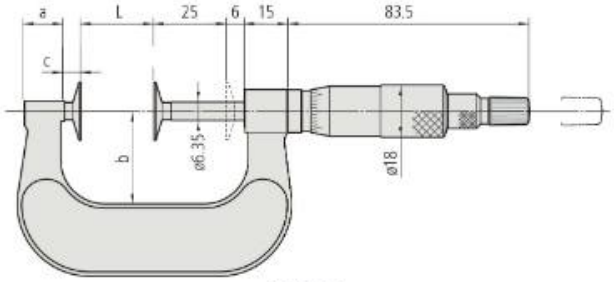

0-50 mm

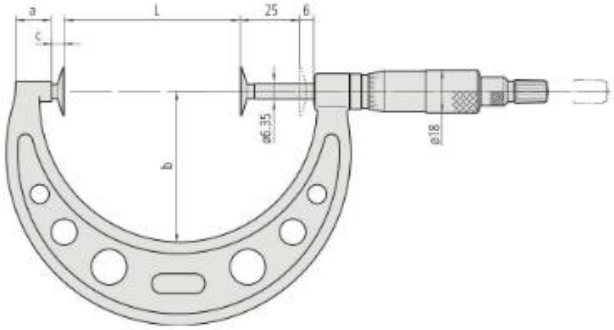

50-100 mm

All products to be sold to commercial customers.
Product illustrations are without obligation. Product descriptions, in particular any and all technical specifications, are only binding when explicitly agreed upon.

Mitutoyo