Micrometer Heads with Counter

Specifications

Measuring spindle	With spindle lock, ø 6,35 mm, spindle pitch 0,5 mm
Measuring face	Carbide-tipped
Scale	• Thimble and sleeve satin chrome finish • White anodized aluminium

Series 250 - Digit counter type

This Digit counter type is a micrometer head with a mechanical counter.



250-301

Metric

No.	Range [mm]	Graduation	Max. Permissible Error E MPE	Spindle end	Spindle pitch [mm]	Stem Ø [mm]	Stem	Mass [g]
250-301	0 - 25	0,01 mm	±2 µm	Flat	0,5	10	Plain	165

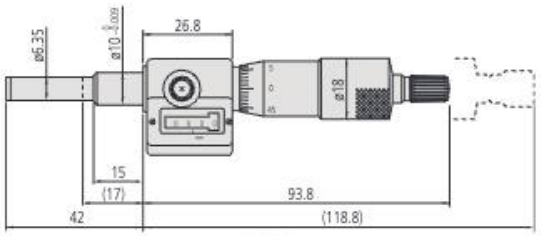

250-301

Micro Jack

Specifications

Measuring face	Hardened steel (>60 HRC)



Series 7

This Micro Jack allows you to make easy adjustments under a heavy load.
It offers the following benefits:

- Adjustments can easily be made under a heavy load.
- You can use it to accurately level machines, surface plates, and other precision instruments.



Metric

No.	Graduation	Range [mm]	Remarks	Mass [g]
7850	0,01 mm	60 - 75	Max. load : 400kg	400

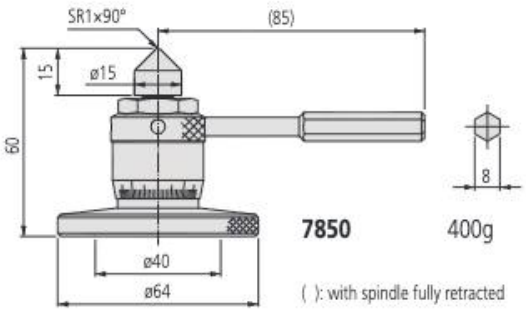

7850 400g

( ): with spindle fully retracted

All products to be sold to commercial customers.
Product illustrations are without obligation. Product descriptions, in particular any and all technical specifications, are only binding when explicitly agreed upon.

Mitutoyo