Digimatic Micrometers IP65 Metric

Series 293 - Individual Range with Data Output

This IP65 micrometer offers outstanding accuracy, with data output, is highly robust and offers the following benefits:

- Oil-resistant material used for all plastic parts
- Extraordinary battery life of 2,4 years
- Excellent resistance against water and dust enables this micrometer to be used in machining situations that include splashing coolant fluid.

Dust- and Water-Protected

Only for 0-25, 25-50 mm



293-234-30 with ratched thimble



293-230-30 with ratched stop



293-252-30



293-237-30

Metric

With ratchet stop

No.	Range [mm]	Digital step	Max. Permissible Error E MPE	Variation in length V MPE	Class EN ISO 3611	Measuring force [N]
293-230-30	0–25	0,001 mm	±1 µm	1 µm	Class 1	5-10
293-231-30	25–50	0,001 mm	±1 µm	1 µm	Class 1	5-10
293-232-30	50–75	0,001 mm	±2 µm	2 µm	Class 1	5-10
293-233-30	75–100	0,001 mm	±2 µm	2 µm	Class 1	5-10
293-250-30	100–125	0,001 mm	±2 µm	5 µm	Class 1	5-10
293-251-30	125–150	0,001 mm	±2 µm	5 µm	Class 1	5-10
293-252-30	150–175	0,001 mm	±3 µm	5 µm	Class 1	5-10
293-253-30	175–200	0,001 mm	±3 µm	5 µm	Class 1	5-10
293-254-30	200–225	0,001 mm	±3 µm	5 µm	Class 1	5-10
293-255-30	225–250	0,001 mm	±4 µm	5 µm	Class 1	5-10
293-256-30	250–275	0,001 mm	±4 µm	5 µm	Class 1	5-10
293-257-30	275–300	0,001 mm	±4 µm	5 µm	Class 1	5-10

No.	L [mm]	a [mm]	b [mm]	c [mm]	Mass [g]
293-230-30	0	6,5	25	2,5	270
293-231-30	25	7,3	32,5	2,5	330
293-232-30	50	10,1	47	2,5	470
293-233-30	75	11,5	60	2,5	625
293-250-30	100	16,7	76	5,3	600
293-251-30	125	18,8	90	5,7	740
293-252-30	150	19,1	103	6,1	800
293-253-30	175	18,2	115	6,3	970
293-254-30	200	16,8	126	6,7	1100
293-255-30	225	18	139	5,5	1270
293-256-30	250	18	152	6,5	1340
293-257-30	275	18	166	6,5	1540

Functions	Series 293 - Individual Range with Data Output
Data output	●
ORIGIN (until 100 mm)	●
ABS / INC (INC ZERO)	●
Auto Power OFF after 20 min. non use	●
Low voltage alarm	●
Function lock	●
HOLD	●
2 x PRESET (over 100 mm)	●

Specifications

Display	LCD, character height 7,5 mm
Measuring face	Carbide-tipped, micro-lap finish
Measuring spindle	With spindle lock, ø 6,35 mm, spindle pitch 0,5 mm
Scale	Thimble and sleeve satin chrome finish
Power supply	1 battery SR-44
Battery life	Approx. 2,4 years, 1,2 years (range >100 mm)
Delivered	Including box, key, 1 battery, setting standard (from 25 mm upward) certificate of inspection (0-50 mm range)

Optional accessories

No.	Description
05CZA662	Digimatic Cable with Data Button IP Type, 1 m, Micrometer Type
05CZA663	Digimatic Cable with Data Button IP Type, 2 m, Micrometer Type
06AFM380B	USB Input Tool Direct (Digimatic to USB), 2m Cable, Digimatic/Digimatic 2, with Data Button IP Micrometer Type
264-622	U-WAVE fit, IP67 Type, Wireless Transmitter for Micrometer/Indicator
264-623	U-WAVE fit, Buzzer Type, Wireless Transmitter for Micrometer/Indicator
264-627	U-WAVE fit Bluetooth, Buzzer Type, Wireless Transmitter for Micrometer/Indicator
264-626	U-WAVE fit Bluetooth, IP67 Type, Wireless Transmitter for Micrometer/Indicator
02AZF310	Connection Unit for IP Caliper, Micrometer, with Data Button for U-WAVE fit, U-WAVE fit Bluetooth

Consumable spares

No.	Description
63AAA800	Battery SR44 1,5 V

All products to be sold to commercial customers.
Product illustrations are without obligation. Product descriptions, in particular any and all technical specifications, are only binding when explicitly agreed upon.

Digimatic Micrometers IP65 Metric

Metric

With ratchet thimble

No.	Range [mm]	Digital step	Max. Permissible Error E MPE	Variation in length V MPE	Class EN ISO 3611	Measuring force [N]
293-234-30	0–25	0,001 mm	±1 µm	1 µm	Class 1	5-10
293-235-30	25–50	0,001 mm	±1 µm	1 µm	Class 1	5-10
293-236-30	50–75	0,001 mm	±2 µm	2 µm	Class 1	5-10
293-237-30	75–100	0,001 mm	±2 µm	2 µm	Class 1	5-10

No.	L [mm]	a [mm]	b [mm]	c [mm]	Mass [g]
293-234-30	0	6,5	25	2,5	270
293-235-30	25	7,3	32,5	2,5	330
293-236-30	50	10,1	47	2,5	470
293-237-30	75	11,5	60	2,5	625



Excellent resistance against water and dust IP65



With Wireless System U-WAVE fit

Scan QR Code with your mobile device and watch our product videos on YouTube

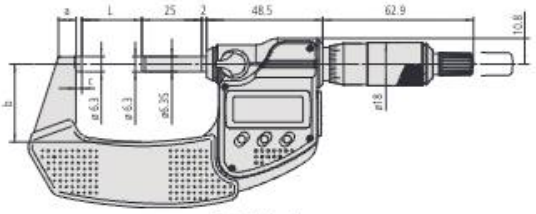

Ratchet stop

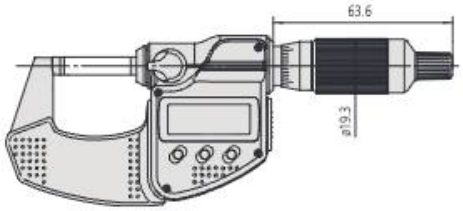

Ratchet thimble

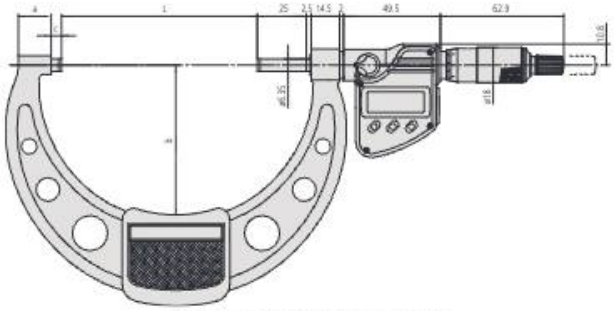

Ratchet stop over 100 mm range

All products to be sold to commercial customers.
Product illustrations are without obligation. Product descriptions, in particular any and all technical specifications, are only binding when explicitly agreed upon.

Mitutoyo