High Accuracy Digital Micrometers

Series 293

ABSOLUTE®

This Micrometer enables 0,1 µm resolution measurements and is ideal for customers who need to make highly accurate measurements with a hand-held tool.

The Absolute High-Accuracy Micrometer offers the following benefits:

- It delivers higher accuracy without sacrificing operability, by using Mitutoyo's innovative 0,1 µm resolution ABS (absolute) rotary sensor and high accuracy screw machining technology which reduces the length measurement error to just 0,5 µm.
- This Outside Micrometer complies with accuracy class 0 according to EN ISO 3611:2023
- Its highly rigid frame and high-performance constant-force mechanism (7-9 N) enable more stable measurement.



293-100-20

Metric

No.	Range [mm]	Digital step	Max. Permissible Error E MPE	Variation in length V MPE	Class EN ISO 3611	Measuring force [N]	Mass [g]
293-100-20	0–25	0,1 µm / 0,5 µm	±0,5 µm	0,6 µm	Class 0	7-9	400

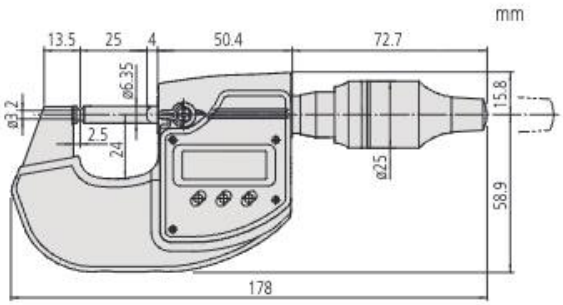

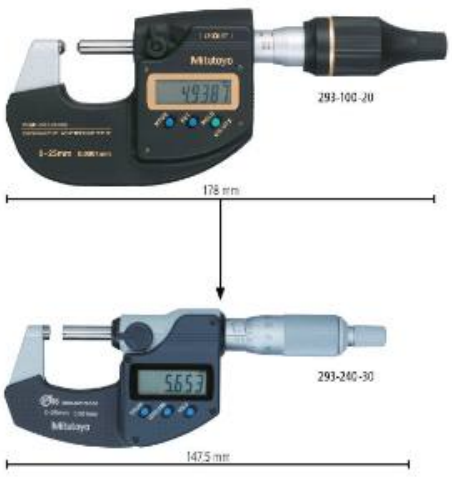

Comparative sizes:
High Accuracy-Micrometer with a highly rigid frame and a common Micrometer with a standard frame

Scan QR Code with your mobile device and watch our product videos on YouTube

Functions	Series 293
Data output	●
ON/OFF	●
Auto Power OFF after 20 min. non use	●
Low voltage alarm	●
Function lock	●
HOLD	●
PRESET	●
Resolution switching	●

Specifications

Display	LCD, character height 7,5 mm
Measuring face	Carbide-tipped, micro-lap finish, Ø 3,2 mm
Measuring spindle	With spindle lock, ø 6,35 mm, spindle pitch 0,5 mm
Scale	Thimble and sleeve satin chrome finish
Power supply	1 lithium battery CR-2032
Battery life	Approx. 2 years
Delivered	Including box, key, driver, 1 battery, heat insulating cover, cleaning paper, certificate of inspection

Optional accessories

No.	Description
05CZA662	Digimatic Cable with Data Button IP Type, 1 m, Micrometer Type
05CZA663	Digimatic Cable with Data Button IP Type, 2 m, Micrometer Type
06AFM380B	USB Input Tool Direct (Digimatic to USB), 2m Cable, Digimatic/Digimatic 2, with Data Button IP Micrometer Type
02AZD880G	U-WAVE-T, Buzzer Type, Wireless Transmitter
02AZD730G	U-WAVE-T, IP67 Type, Wireless Transmitter
02AZD790B	Connection Cable B for U-WAVE, with Data Button for IP Micrometer Type

Consumable spares

No.	Description
05SAA217D	Lithium battery CR-2032, 1 pcs.



0,1 µm digital step





All products to be sold to commercial customers.
Product illustrations are without obligation. Product descriptions, in particular any and all technical specifications, are only binding when explicitly agreed upon.