Digimatic V-Anvil Micrometers

Series 314

This Digimatic V-Anvil Micrometer helps you to measure cutting tools and taps.
It offers the following benefits:

- It measures the outside diameter of cutting tools (such as taps, reamers, end mills) which have three flutes.
- V-anvils with a centreline groove are available for measuring the pitch diameter of taps by the single-wire method.

Functions	Series 314
Data output	●
ABS / INC (INC ZERO)	●
Auto Power OFF after 20 min. non use	●
Low voltage alarm	●
Function lock	●
HOLD	●
2 x PRESET	●

Specifications

Display	LCD, character height 7,5 mm
Measuring face	Prism angle 60°
Measuring spindle	With spindle lock, ø 6,35 mm, spindle pitch 0,75 mm
Scale	Thimble and sleeve satin chrome finish
Power supply	1 battery SR-44
Battery life	Approx. 2,4 years
Delivered	Including box, setting standard, key, 1 battery

Optional accessories

No.	Description
05CZA662	Digimatic Cable with Data Button IP Type, 1 m, Micrometer Type
05CZA663	Digimatic Cable with Data Button IP Type, 2 m, Micrometer Type
06AFM380B	USB Input Tool Direct (Digimatic to USB), 2m Cable, Digimatic/Digimatic 2, with Data Button IP Micrometer Type
264-622	U-WAVE fit, IP67 Type, Wireless Transmitter for Micrometer/Indicator
264-623	U-WAVE fit, Buzzer Type, Wireless Transmitter for Micrometer/Indicator
264-626	U-WAVE fit Bluetooth, IP67 Type, Wireless Transmitter for Micrometer/Indicator
264-627	U-WAVE fit Bluetooth, Buzzer Type, Wireless Transmitter for Micrometer/Indicator
02AZF310	Connection Unit for IP Caliper, Micrometer, with Data Button for U-WAVE fit, U-WAVE fit Bluetooth

Consumable spares

No.	Description
63AAA800	Battery SR44 1,5 V





314-251-30

Metric

No.	Range [mm]	Digital step	Max. Permissible Error E MPE	Flatness	Anvil	Measuring force [N]	Setting standard	Mass [g]
314-251-30	1–15	0,001 mm	±4 µm	0,3 µm (spindle), 1 µm (anvil)	With groove	3-8	167-327 ø 5 mm	275
314-261-30	1–15	0,001 mm	±4 µm	0,3 µm (spindle), 1 µm (anvil)	Without groove	3-8	167-327 ø 5 mm	275
314-252-30	10–25	0,001 mm	±4 µm	0,3 µm (spindle), 1 µm (anvil)	With groove	5-10	167-328 ø 10 mm	410
314-262-30	10–25	0,001 mm	±4 µm	0,3 µm (spindle), 1 µm (anvil)	Without groove	5-10	167-328 ø 10 mm	410
314-253-30	25–40	0,001 mm	±5 µm	0,3 µm (spindle), 1 µm (anvil)	Without groove	5-10	167-329 ø 25 mm	465

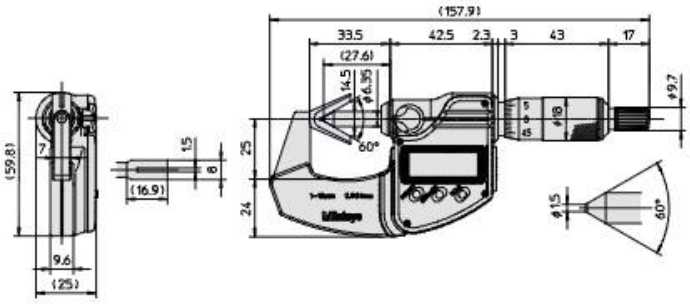

1 - 15 mm

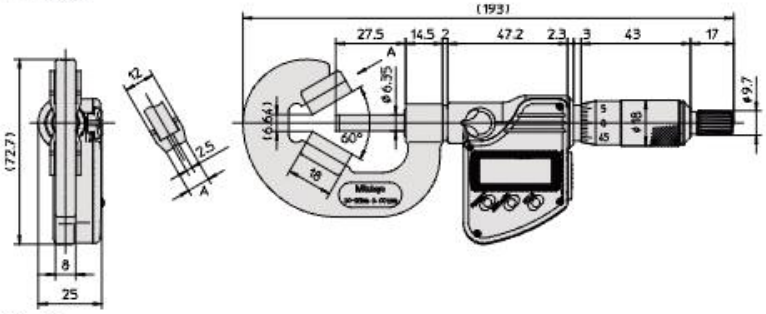

10 - 25 mm

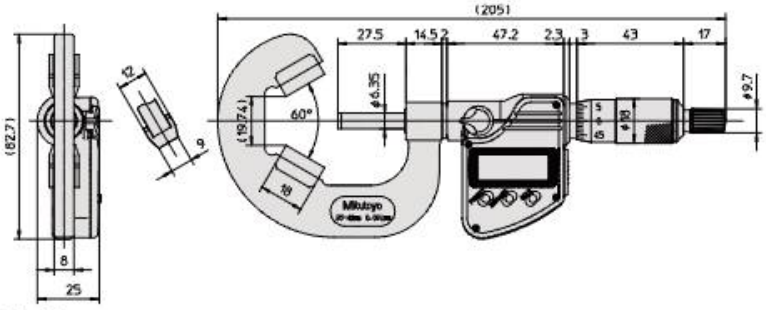

25 - 40 mm

All products to be sold to commercial customers.
Product illustrations are without obligation. Product descriptions, in particular any and all technical specifications, are only binding when explicitly agreed upon.

Mitutoyo