Digimatic Micrometers Interchangeable Anvil Type

Functions	Series 317
Data output	●
ORIGIN	●
ABS / INC (INC ZERO)	●
Auto Power OFF after 20 min. non use	●
Low voltage alarm	●
Function lock	●
HOLD	●

Specifications

Display	LCD, character height 7,5 mm
Measuring face	Carbide-tipped spindle, hardened anvil
Measuring spindle	With spindle lock, ø 6,35 mm, spindle pitch 0,5 mm
Scale	Thimble and sleeve satin chrome finish
Power supply	1 battery SR-44
Battery life	Approx. 2,4 years
Delivered	Including box, setting standard (from 25 mm upward), key, 1 battery, anvils

Optional accessories

No.	Description
05CZA662	Digimatic Cable with Data Button IP Type, 1 m, Micrometer Type
05CZA663	Digimatic Cable with Data Button IP Type, 2 m, Micrometer Type
06AFM380B	USB Input Tool Direct (Digimatic to USB), 2m Cable, Digimatic/Digimatic 2, with Data Button IP Micrometer Type
264-622	U-WAVE fit, IP67 Type, Wireless Transmitter for Micrometer/Indicator
264-623	U-WAVE fit, Buzzer Type, Wireless Transmitter for Micrometer/Indicator
264-626	U-WAVE fit Bluetooth, IP67 Type, Wireless Transmitter for Micrometer/Indicator
264-627	U-WAVE fit Bluetooth, Buzzer Type, Wireless Transmitter for Micrometer/Indicator
02AZF310	Connection Unit for IP Caliper, Micrometer, with Data Button for U-WAVE fit, U-WAVE fit Bluetooth
201218	V-Anvil
950758	Round Base for Series 117, for 0-25mm

Consumable spares

No.	Description
63AAA800	Battery SR44 1,5 V
201217	Cylindrical Anvil 3mm
201379	Cylindrical Anvil 5mm
201216	Flat Anvil



950758 with micrometer

Series 317

Dust- and Water-Protected

This Digimatic Micrometer Interchangeable Anvil Type lets you measure a range of different features.
It offers the following benefits:

- Measures tubing thickness, shoulder edge distance, rivet head height, etc., with interchangeable anvils (flat anvil, rod anvil, V-anvil).



317-251-30

Metric

No.	Range [mm]	Digital step	Max. Permissible Error E MPE	Variation in length V MPE	Flatness	Measuring force [N]	Content of Set	Mass [g]
317-251-30	0–25	0,001 mm	±4 µm	3 µm	0,6 µm (spindle), 2 µm (anvil)	5-10	Anvils 201217, 201216	335
317-252-30	25–50	0,001 mm	±4 µm	3 µm	0,6 µm (spindle), 2 µm (anvil)	5-10	Anvils 201379, 201216	360

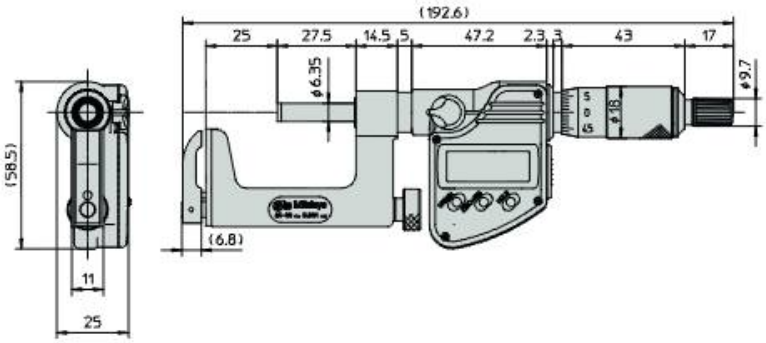

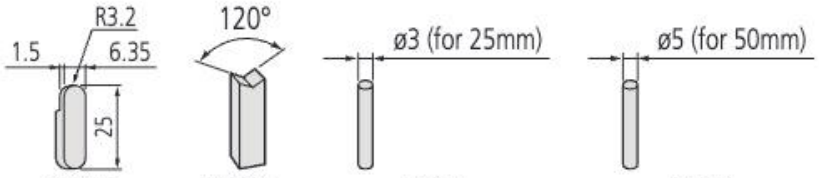

201216 Flat anvil | 201218 V-anvil | 201217 Cylindrical anvil | 201379 Cylindrical anvil

All products to be sold to commercial customers.
Product illustrations are without obligation. Product descriptions, in particular any and all technical specifications, are only binding when explicitly agreed upon.