Digimatic Caliper Jaw Micrometers

Series 343

This Digimatic Caliper Jaw Micrometer has been specially designed for measuring in hard-to-reach places.

Functions	Series 343
Data output	●
ORIGIN	●
ABS / INC (INC ZERO)	●
Auto Power OFF after 20 min. non use	●
Low voltage alarm	●
Function lock	●
HOLD	●

Specifications

Display	LCD, character height 7,5 mm
Measuring face	Carbide-tipped, micro-lap finish
Measuring spindle	With spindle lock, ø 6,35 mm, spindle pitch 0,5 mm
Scale	Thimble and sleeve satin chrome finish
Power supply	1 battery SR-44
Battery life	Approx. 2,4 years
Delivered	Including box, key, 1 battery, setting standard (from 25 mm upward)

Optional accessories

No.	Description
05CZA662	Digimatic Cable with Data Button IP Type, 1 m, Micrometer Type
05CZA663	Digimatic Cable with Data Button IP Type, 2 m, Micrometer Type
06AFM380B	USB Input Tool Direct (Digimatic to USB), 2m Cable, Digimatic/Digimatic 2, with Data Button IP Micrometer Type
264-622	U-WAVE fit, IP67 Type, Wireless Transmitter for Micrometer/Indicator
264-623	U-WAVE fit, Buzzer Type, Wireless Transmitter for Micrometer/Indicator
264-626	U-WAVE fit Bluetooth, IP67 Type, Wireless Transmitter for Micrometer/Indicator
264-627	U-WAVE fit Bluetooth, Buzzer Type, Wireless Transmitter for Micrometer/Indicator
02AZF310	Connection Unit for IP Caliper, Micrometer, with Data Button for U-WAVE fit, U-WAVE fit Bluetooth

Consumable spares

No.	Description
63AAA800	Battery SR44 1,5 V





343-250-30

Metric

No.	Range [mm]	Digital step	Max. Permissible Error E MPE	Variation in length V MPE	Measuring force [N]	L [mm]
343-250-30	0–25	0,001 mm	±5 µm	3 µm	1-6	0
343-251-30	25–50	0,001 mm	±6 µm	3 µm	1-6	25
343-252-30	50–75	0,001 mm	±7 µm	4 µm	1-6	50
343-253-30	75–100	0,001 mm	±8 µm	4 µm	1-6	75

No.	a [mm]	b [mm]	c [mm]	Mass [g]
343-250-30	16	10,6	32,9	320
343-251-30	16	10,6	32,9	340
343-252-30	16	10,6	32,9	390
343-253-30	16	10,6	32,9	440

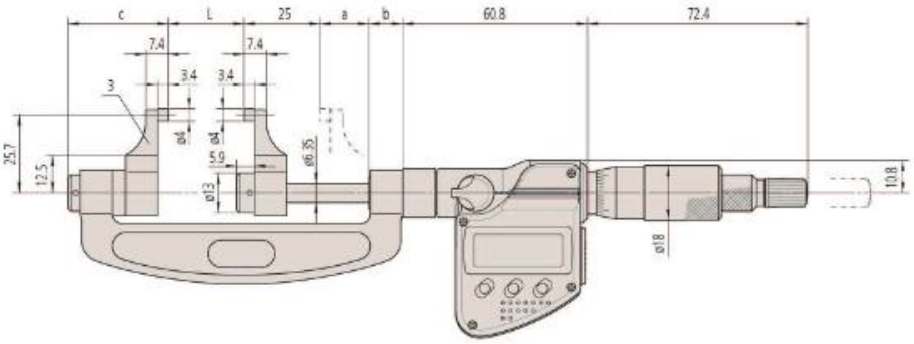

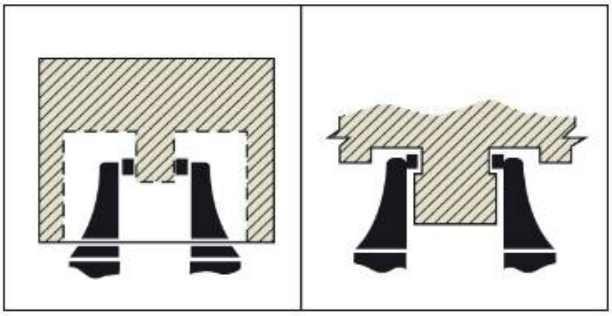

All products to be sold to commercial customers.
Product illustrations are without obligation. Product descriptions, in particular any and all technical specifications, are only binding when explicitly agreed upon.

Mitutoyo