Digital Micrometer Heads with 10 mm Stem

Functions	Series 350
Data output	●
ABS / INC (INC ZERO)	●
Auto Power OFF after 20 min. non use	●
Function lock	●
HOLD	●
2 x PRESET	●

Specifications

Display	LCD, character height 7,5 mm
Measuring face	Carbide-tipped
Measuring spindle	With spindle lock, ø 6,35 mm
Scale	Thimble and sleeve satin chrome finish
Power supply	1 battery SR-44
Battery life	Approx. 2,4 years

Optional accessories

No.	Description
05CZA662	Digimatic Cable with Data Button IP Type, 1 m, Micrometer Type
05CZA663	Digimatic Cable with Data Button IP Type, 2 m, Micrometer Type
06AFM380B	USB Input Tool Direct (Digimatic to USB), 2m Cable, Digimatic/Digimatic 2, with Data Button IP Micrometer Type
264-622	U-WAVE fit, IP67 Type, Wireless Transmitter for Micrometer/Indicator
264-623	U-WAVE fit, Buzzer Type, Wireless Transmitter for Micrometer/Indicator
264-627	U-WAVE fit Bluetooth, Buzzer Type, Wireless Transmitter for Micrometer/Indicator
264-626	U-WAVE fit Bluetooth, IP67 Type, Wireless Transmitter for Micrometer/Indicator
02AZF310	Connection Unit for IP Caliper, Micrometer, with Data Button for U-WAVE fit, U-WAVE fit Bluetooth

Consumable spares

No.	Description
63AAA800	Battery SR44 1,5 V

Series 350

This Micrometer Head has a 25 mm range and a 10 mm stem, and offers the following benefits:

- You can integrate it into machinery and measuring instruments.
- Measurement values are clearly displayed in 0,001mm increments.
- Stem diameter: 10 mm.



350-251-30

Metric

No.	Range [mm]	Digital step	Max. Permissible Error E MPE	Spindle end	Spindle pitch [mm]	Stem Ø [mm]	Stem	Fixture thickness for clamp nut [mm]	Mass [g]
350-251-30	0 - 25	0,001 mm	±2 µm	Flat	0,5	10	Plain		230
350-252-30	0 - 25	0,001 mm	±2 µm	Flat	0,5	10	w/ clamp nut	11,5	230
350-253-30	0 - 25	0,001 mm	±2 µm	Spherical (SR4)	0,5	10	Plain		230
350-254-30	0 - 25	0,001 mm	±2 µm	Spherical (SR4)	0,5	10	w/ clamp nut	11,5	230

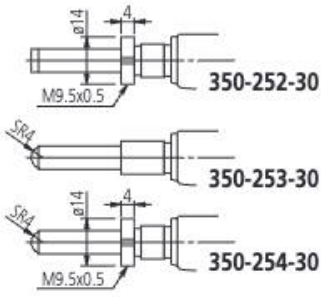

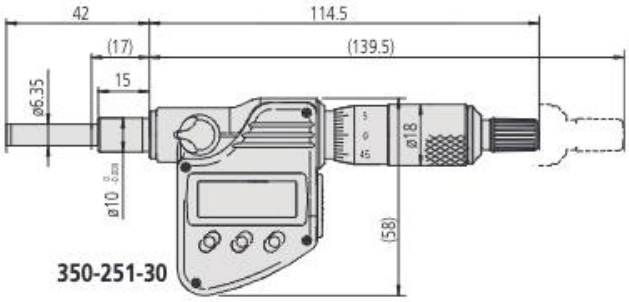

(): with spindle full retracted

All products to be sold to commercial customers.
Product illustrations are without obligation. Product descriptions, in particular any and all technical specifications, are only binding when explicitly agreed upon.

Mitutoyo