Digimatic Disc Micrometers Non-Rotating Spindle Type

Functions	Series 369
Data output	●
ORIGIN	●
ABS / INC (INC ZERO)	●
Auto Power OFF after 20 min. non use	●
Low voltage alarm	●
Function lock	●
HOLD	●

Specifications

Display	LCD, character height 7,5 mm
Measuring face	Hardened steel
Measuring spindle	With spindle lock, ø 6,35 mm, spindle pitch 0,5 mm
Scale	Thimble and sleeve satin chrome finish
Power supply	1 battery SR-44
Battery life	Approx. 2,4 years
Delivered	Including box, key, 1 battery, setting standard (from 25 mm upward)

Optional accessories

No.	Description
05CZA662	Digimatic Cable with Data Button IP Type, 1 m, Micrometer Type
05CZA663	Digimatic Cable with Data Button IP Type, 2 m, Micrometer Type
06AFM380B	USB Input Tool Direct (Digimatic to USB), 2m Cable, Digimatic/Digimatic 2, with Data Button IP Micrometer Type
264-622	U-WAVE fit, IP67 Type, Wireless Transmitter for Micrometer/Indicator
264-623	U-WAVE fit, Buzzer Type, Wireless Transmitter for Micrometer/Indicator
264-627	U-WAVE fit Bluetooth, Buzzer Type, Wireless Transmitter for Micrometer/Indicator
264-626	U-WAVE fit Bluetooth, IP67 Type, Wireless Transmitter for Micrometer/Indicator
02AZF310	Connection Unit for IP Caliper, Micrometer, with Data Button for U-WAVE fit, U-WAVE fit Bluetooth

Consumable spares

No.	Description
63AAA800	Battery SR44 1,5 V



Series 369

This Digimatic Disc Micrometer allows you to measure a range of different materials.
It offers you the following benefits:

- Non-rotating spindle and disc-shaped measuring surfaces.
- Measuring the root tangent length of spur and helical gears
- Measurable range of gear pitch: 0,5-6 module
- Suitable for measuring felt, rubber, cardboard, fabric etc.



369-250-30

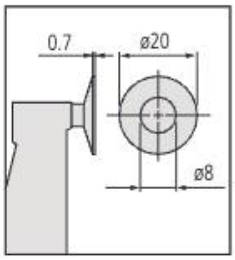

Metric

No.	Range [mm]	Digital step	Max. Permissible Error E MPE	Variation in length V MPE	Measuring force [N]	Measurable module [mm]	L [mm]
369-250-30	0–25	0,001 mm	±4 µm	4 µm	3-8	0,5 - 6	58,5
369-251-30	25–50	0,001 mm	±4 µm	4 µm	3-8	0,5 - 6	83,5
369-252-30	50–75	0,001 mm	±6 µm	6 µm	3-8	0,5 - 6	108,5
369-253-30	75–100	0,001 mm	±6 µm	6 µm	3-8	0,5 - 6	112,5

No.	a [mm]	b [mm]	c [mm]	Mass [g]
369-250-30	12,9	7	32	340
369-251-30	12,9	9,8	47	480
369-252-30	12,9	11,2	60	635
369-253-30	5,5	13,5	60	775

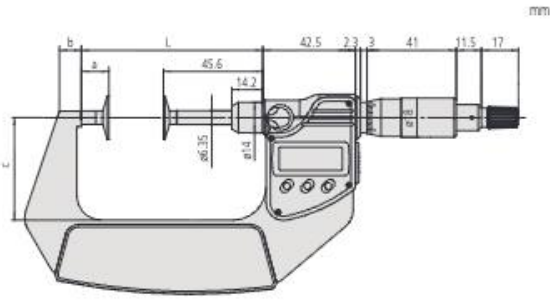

0-75 mm

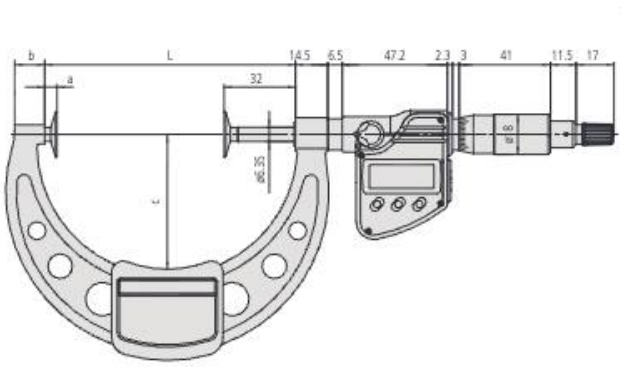

75-100 mm

All products to be sold to commercial customers.
Product illustrations are without obligation. Product descriptions, in particular any and all technical specifications, are only binding when explicitly agreed upon.

Mitutoyo