Digimatic Sheet Metal Micrometers

Series 389

This Digimatic Sheet Metal Micrometer is designed with a deep frame, for measuring the thickness of sheet material.

Dust- and Water-Protected

IP65 except 389-514



389-261-30



389-514

Functions	Series 389
Data output	●
ORIGIN	●
ABS / INC (INC ZERO)	●
Auto Power OFF after 20 min. non use	●
Low voltage alarm	●
Function lock	●
HOLD	●
2 x PRESET	●

Specifications

Display	LCD, character height 7,5 mm
Measuring face	Carbide-tipped, micro-lap finish
Measuring spindle	With spindle lock, ø 6,35 mm/ø 8 mm (389-514), spindle pitch 0,5 mm
Scale	Thimble and sleeve satin chrome finish
Power supply	Battery SR-44
Battery life	Approx. 2,4 years, approx. 1,8 years (389-514)
Delivered	Including box, key, 1 battery, 2 batteries (389-514)

Metric

No.	Range [mm]	Digital step	Max. Permissible Error E MPE	Variation in length V MPE	Anvil / Spindle	Measuring force [N]	Throat depth [mm]	Mass [g]
389-251-30	0–25	0,001 mm	±4 µm	3 µm	Type A, flat/flat	3-8	160	840
389-261-30	0–25	0,001 mm	±4 µm		Type B, spherical/flat	3-8	160	840
389-271-30	0–25	0,001 mm	±4 µm		Type C, spherical/spherical	3-8	160	840
389-514	0–25	0,001 mm	±5 µm	3 µm	Type A, flat/flat	10-14	330	2750
389-252-30	25–50	0,001 mm	±4 µm	3 µm	Type A, flat/flat	3-8	160	920
389-262-30	25–50	0,001 mm	±4 µm		Type B, spherical/flat	3-8	160	920
389-272-30	25–50	0,001 mm	±4 µm		Type C, spherical/spherical	3-8	160	920

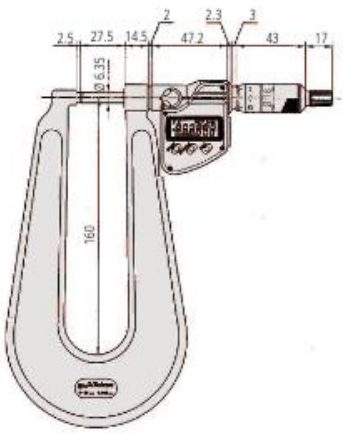

0-25 mm

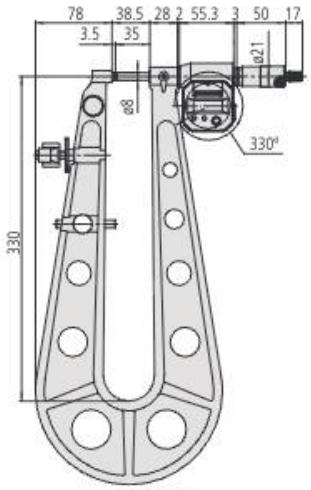

389-514

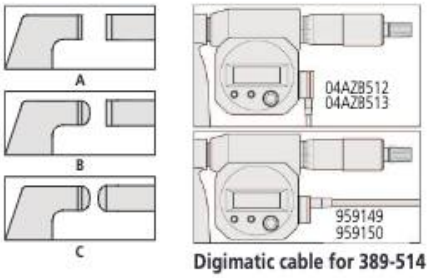

Digimatic cable for 389-514

Optional accessories

No.	Description
05CZA662	Digimatic Cable with Data Button IP Type, 1 m, Micrometer Type
05CZA663	Digimatic Cable with Data Button IP Type, 2 m, Micrometer Type
06AFM380B	USB Input Tool Direct (Digimatic to USB), 2m Cable, Digimatic/Digimatic 2, with Data Button IP Micrometer Type
264-622	U-WAVE fit, IP67 Type, Wireless Transmitter for Micrometer/Indicator
264-623	U-WAVE fit, Buzzer Type, Wireless Transmitter for Micrometer/Indicator
264-626	U-WAVE fit Bluetooth, IP67 Type, Wireless Transmitter for Micrometer/Indicator
264-627	U-WAVE fit Bluetooth, Buzzer Type, Wireless Transmitter for Micrometer/Indicator
02AZF310	Connection Unit for IP Caliper, Micrometer, with Data Button for U-WAVE fit, U-WAVE fit Bluetooth
959150	Digimatic Cable, Straight, Data Button, 2 m
959149	Digimatic Cable, Straight, Data Button, 1 m
04AZB512	Digimatic Cable with Data Button, 1 m, Flat L-Shape Left Type
04AZB513	Digimatic Cable, Straight, Data Button, 2 m, Flat L-Shape Left Type
06AFM380C	USB Input Tool Direct (Digimatic to USB), 2m Cable, Digimatic/Digimatic 2, Straight, with Data Button
02AZD880G	U-WAVE-T, Buzzer Type, Wireless Transmitter
02AZD730G	U-WAVE-T, IP67 Type, Wireless Transmitter
02AZD790C	Connection Cable C for U-WAVE, Straight, with Data Button

959149, 959150, 04AZB512, 04AZB513 06AFM380C, 02AZD880G, 02AZD730G, 02AZD790C for 389-514

Consumable spares

No.	Description
63AAA800	Battery SR44 1,5 V

All products to be sold to commercial customers.
Product illustrations are without obligation. Product descriptions, in particular any and all technical specifications, are only binding when explicitly agreed upon.