ABSOLUTE Coolant Proof Calipers IP67 with Carbide Tipped Jaws

Series 500

These robust calipers have carbide-tipped jaws and allow reliable measurements in a wide range of situations.
The ABSOLUTE Digimatic Carbide Caliper IP67 offers you the following benefits:

- Excellent resistance against water and dust (IP67 protection level) enabling use in machining situations that include splashing coolant fluid.
- Dustproof, complies with EN60529 withstands temporary complete immersion in water without suffering any damage
- Extraordinarily long battery life.

Dust- and Water-Protected

ABSOLUTE

PROPRIETARY INSPECTION CERTIFICATE

IP67



500-727-20

Metric Carbide-tipped jaws for outside/inside measurement

No.	Range [mm]	Depth bar	Thumb roller	Data output	Max. Permissible Error E MPE	Max. Permissible Error S MPE
500-727-20	0–150	flat		●	±0,02 mm	±0,04 mm
500-723-20	0–150	flat	●	●	±0,02 mm	±0,04 mm
500-728-20	0–200	flat		●	±0,02 mm	±0,04 mm
500-724-20	0–200	flat	●	●	±0,02 mm	±0,04 mm

No.	L [mm]	A [mm]	B [mm]	C [mm]	D [mm]	H [mm]	Mass [g]
500-727-20	233	16,5	21	14,6	40	16	164
500-723-20	233	16,5	21	14,6	40	16	168
500-728-20	290	20	24,5	18,1	50	16	194
500-724-20	290	20	24,5	18,1	50	16	198

Metric Carbide-tipped jaws for outside measurement

No.	Range [mm]	Depth bar	Thumb roller	Data output	Max. Permissible Error E MPE	Max. Permissible Error S MPE
500-721-20	0–150	flat	●	●	±0,02 mm	±0,04 mm
500-722-20	0–200	flat	●	●	±0,02 mm	±0,04 mm

No.	L [mm]	A [mm]	B [mm]	C [mm]	D [mm]	H [mm]	Mass [g]
500-721-20	233	16,5	21	14,6	40	16	168
500-722-20	290	20	24,5	18,1	50	16	198

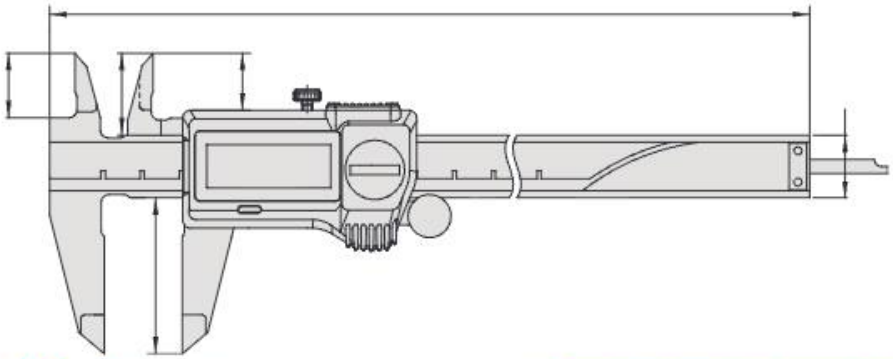

Functions	Series 500
ORIGIN (ABS-Zero)	●
Auto Power OFF after 20 min. non use	●
Low voltage alarm	●

Specifications

Digital step	0,01 mm
Max. response speed	Unlimited
Display	LCD, character height 9 mm
Battery life	Approx. 5 years under normal use
Delivered	In a case, including 1 battery

Optional accessories

No.	Description
05CZA624	Digimatic Cable with Data Button IP Type, 1 m, Caliper Type
05CZA625	Digimatic Cable with Data Button IP Type, 2 m, Caliper Type
06AFM380A	USB Input Tool Direct (Digimatic to USB), 2m Cable, Digimatic/Digimatic 2, with Data Button IP Caliper Type
264-620	U-WAVE fit, IP67 Type, Wireless Transmitter for Caliper
264-621	U-WAVE fit, Buzzer Type, Wireless Transmitter for Caliper
264-624	U-WAVE fit Bluetooth, IP67 Type, Wireless Transmitter for Caliper
264-625	U-WAVE fit Bluetooth, Buzzer Type, Wireless Transmitter for Caliper
02AZF310	Connection Unit for IP Caliper, Micrometer, with Data Button for U-WAVE fit, U-WAVE fit Bluetooth
050083-10	Depth Base Attachment for Caliper, 75mm width for 100, 150, 200mm Range
050084-10	Depth Base Attachment for Caliper, 100mm width for 100, 150, 200mm Range

Consumable spares

No.	Description
63AAA800	Battery SR44 1,5 V

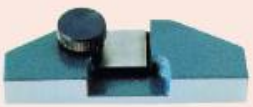

050083-10

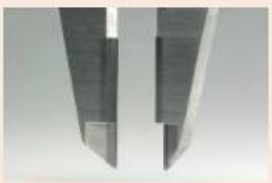



Carbide-tipped jaws

All products to be sold to commercial customers.
Product illustrations are without obligation. Product descriptions, in particular any and all technical specifications, are only binding when explicitly agreed upon.