Indicating Micrometers

Series 510

This is an Indicating Micrometer with a dial comparator that enables you to take fast and highly accurate measurements. It offers you the following benefits:

- It is easy to use when operated one-handed due to retractable anvil.
- Protection level IP54 and large and easy to read characters on the dial plate
- Large dial comparator for easy reading (+/- 0.06 mm)
- Tolerance markers for GO/NG measurements
- 8 mm spindle diameter gives you easy positioning and highly accurate measurements.



510-121



510-141

Metric

No.	Range [mm]	Graduation	Indicating range	Anvil retracting stroke	Spindle feed error [µm]
510-121	0–25	0,001 mm	±0,06 mm	2 mm	3
510-141	0–25	0,001 mm	±0,06 mm	2 mm	3
510-122	25–50	0,001 mm	±0,06 mm	2 mm	3
510-123	50–75	0,001 mm	±0,06 mm	2 mm	3
510-124	75–100	0,001 mm	±0,06 mm	2 mm	3

No.	Accuracy dial comparator	Repeatability	Flatness	Parallelism	Measuring force [N]	Operating button	L [mm]	D [mm]	Mass [g]
510-121	1 µm	0,4 µm	0,3 µm	0,6 µm	5-10	Right	31,5	25	520
510-141	1 µm	0,4 µm	0,3 µm	0,6 µm	5-10	Left	31,5	25	520
510-122	1 µm	0,4 µm	0,3 µm	0,6 µm	5-10	Left	56,5	38	670
510-123	1 µm	0,4 µm	0,3 µm	1 µm	5-10	Left	81,5	50	820
510-124	1 µm	0,4 µm	0,3 µm	1 µm	5-10	Left	106,5	63	970

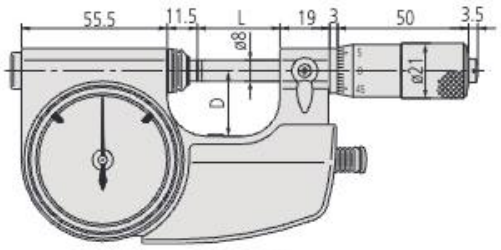

0-25 mm

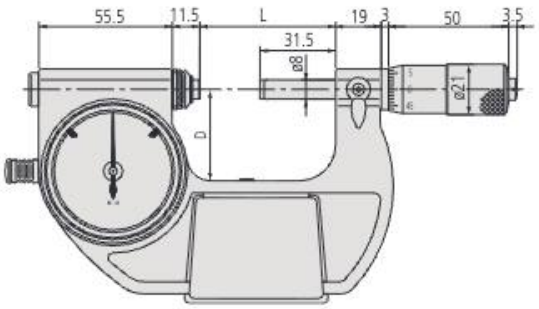

25-100 mm

Specifications

Measuring face	Carbide-tipped, micro-lap finish, ø 8 mm
Scale	Thimble and sleeve satin chrome finish ø21 mm
Delivered	Including box, key

Optional accessories

No.	Description
04AZA124	Workpiece Stopper Indicating Micrometer, 23mm
04AZA125	Workpiece Stopper Indicating Micrometer, 20,5mm
04AZA126	Workpiece Stopper Indicating Micrometer, 15mm

Measuring range mm	Nr.	Diameter range of workpiece supported A Ø mm	B Ø mm	C Ø mm
0– 25	510-121	–	4–16	15– 25
25– 50	510-122	25–37	30–42	41– 50
50– 75	510-123	50–61	54–66	65– 75
75–100	510-124	75–87	80–92	91–100

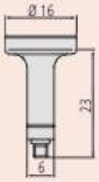

04AZA124 Workpiece stop A

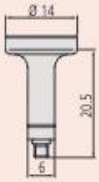

04AZA125 Workpiece stop B

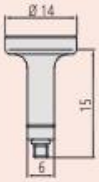

04AZA126 Workpiece stop C







Adjusting screw for dial comparator ± 5 µm

All products to be sold to commercial customers.
Product illustrations are without obligation. Product descriptions, in particular any and all technical specifications, are only binding when explicitly agreed upon.