Indicating Snap Gauges

Specifications

Measuring face	Carbide-tipped, micro-lap finish ø 10,8 mm
Delivered	Including box, workpiece rest



Series 523

IP54

This is a Snap Gauge with integrated dial comparator. It offers you the following benefits:

- It is ideal for rapidly inspecting workpieces, especially cylindrical, in batch or mass production situations.
- It can be set with external length standards such as block gauges.
- Easy-to-operate retracting button



523-121

Metric

No.	Range [mm]	Graduation	Indicating range	Anvil retracting stroke	Accuracy dial comparator	Repeatability	Flatness
523-121	0–25	0,001 mm	±0,06 mm	2 mm	1 µm	0,4 µm	0,3 µm
523-122	25–50	0,001 mm	±0,06 mm	2 mm	1 µm	0,4 µm	0,3 µm
523-123	50–75	0,001 mm	±0,06 mm	2 mm	1 µm	0,4 µm	0,3 µm
523-124	75–100	0,001 mm	±0,06 mm	2 mm	1 µm	0,4 µm	0,3 µm

No.	Parallelism	Measuring force [N]	L [mm]	D [mm]	Mass [g]
523-121	0,6 µm	5-10	31	25	740
523-122	0,6 µm	5-10	56	35	840
523-123	1 µm	5-10	81	47,5	950
523-124	1 µm	5-10	106	60	1080

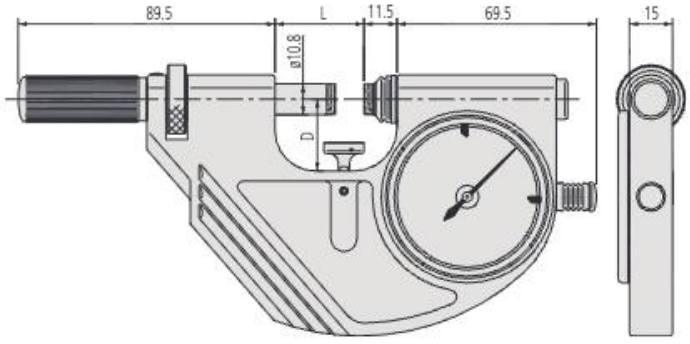

All products to be sold to commercial customers.
Product illustrations are without obligation. Product descriptions, in particular any and all technical specifications, are only binding when explicitly agreed upon.

Mitutoyo