Offset Centerline Calipers

Series 536

This Offset Centerline Caliper enables you to measure center-to-center distance and offers you the following benefits:

- Center-to-center measurements for holes on the same plane or between offset planes.
- Edge to center measurements.



536-106

Specifications

Delivered	In a case

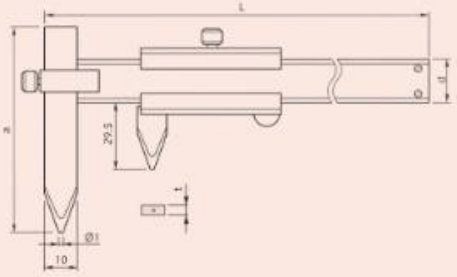

Metric

No.	Range [mm]	Graduation	Depth bar	Max. Permissible Error S MPE	L [mm]	a [mm]	d [mm]	t [mm]	Mass [g]
536-105	10,1–150	0,05 mm	Without	±0,05 mm	229	75	16	3	140
536-106	10,1–200	0,05 mm	Without	±0,05 mm	282	75	16	3	160
536-107	10,1–300	0,05 mm	Without	±0,08 mm	383	100	20	3,8	320

Swivel Calipers

Series 536

These Vernier Calipers have a swivelling jaw. They offer you the following benefits:

- You can rotate the moving jaw to measure sectioned shafts.



536-212

Specifications

Delivered	In a case





Metric

No.	Range [mm]	Graduation	Depth bar	Max. Permissible Error E MPE	Max. Permissible Error S MPE	Remarks	Mass [g]
536-212	0–200	0,05 mm	Flat	±0,05 mm	±0,07 mm	Swivel range ±90°	190

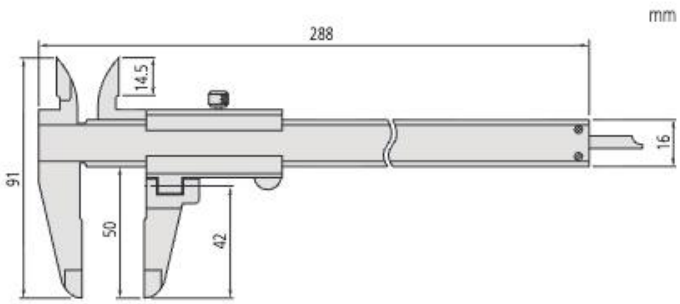

All products to be sold to commercial customers.
Product illustrations are without obligation. Product descriptions, in particular any and all technical specifications, are only binding when explicitly agreed upon.