Knife-Edge Calipers

Series 573

These Digital Knife Edge Caliper offer you the following benefits:
- Specially designed to let you take inside measurements in hard-to-reach places.
- With long narrow jaws.

Dust- and Water-Protected
TÜVRheinland CERTIFIED
www.tuv.com ID 0000045042

ABSOLUTE®

IP67



573-642-20

Functions	Series 573
ORIGIN (ABS-Zero)	●
Auto Power OFF after 20 min. non use	●
Low voltage alarm	●
Data output	●

Specifications

Digital step	0,01 mm
Max. response speed	Unlimited
Display	LCD, character height 9 mm
Battery life	Approx. 5 years under normal use
Delivered	In a case, including 1 battery

Optional accessories

No.	Description
05CZA624	Digimatic Cable with Data Button IP Type, 1 m, Caliper Type
05CZA625	Digimatic Cable with Data Button IP Type, 2 m, Caliper Type
06AFM380A	USB Input Tool Direct (Digimatic to USB), 2m Cable, Digimatic/Digimatic 2, with Data Button IP Caliper Type
02AZD880G	U-WAVE-T, Buzzer Type, Wireless Transmitter
02AZD730G	U-WAVE-T, IP67 Type, Wireless Transmitter
02AZD790A	Connection Cable A for U-WAVE, with Data Button for IP Caliper Type

Consumable spares

No.	Description
63AAA800	Battery SR44 1,5 V

Metric

No.	Range [mm]	Depth bar	Thumb roller	Max. Permissible Error S MPE	Mass [g]
573-642-20	10–200	Without	●	±0,05 mm	227
573-643-20	10–200	Without		±0,05 mm	227

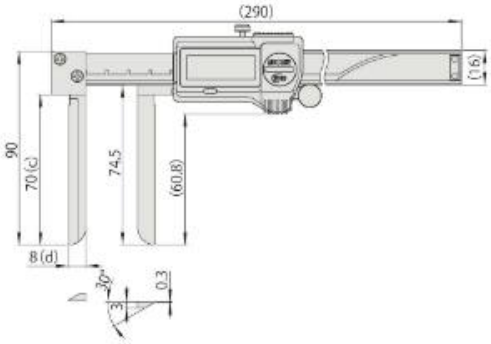

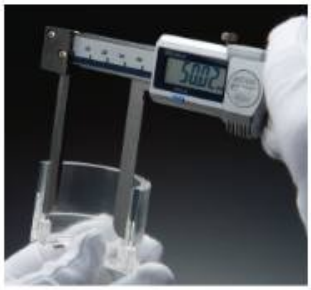

Series 536

This Analog Knife Edge Caliper offer you the following benefits:
- Specially designed to let you take inside measurements in hard-to-reach places.
- With long narrow jaws.



536-142

Specifications

Delivered	In a case

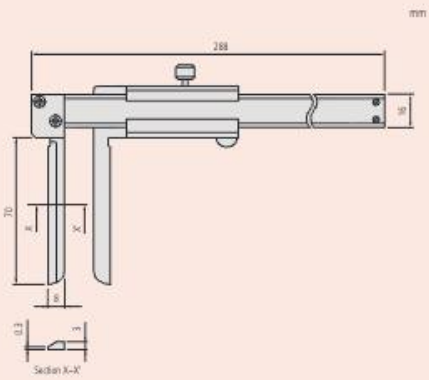

Metric

No.	Range [mm]	Graduation	Depth bar	Max. Permissible Error S MPE	Mass [g]
536-142	10–200	0,05 mm	Without	±0,12 mm	210

All products to be sold to commercial customers.
Product illustrations are without obligation. Product descriptions, in particular any and all technical specifications, are only binding when explicitly agreed upon.