Offset Calipers

Functions	Series 573
ORIGIN (ABS-Zero)	●
Auto Power OFF after 20 min. non use	●
Low voltage alarm	●
Data output	●

Specifications

Digital step	0,01 mm
Max. response speed	Unlimited
Display	LCD, character height 9 mm (150 mm, 200 mm) 11 mm (300 mm)
Battery life	Approx. 5 years under normal use
Delivered	In a case, including 1 battery

Optional accessories

No.	Description
05CZA624	Digimatic Cable with Data Button IP Type, 1 m, Caliper Type
05CZA625	Digimatic Cable with Data Button IP Type, 2 m, Caliper Type
06AFM380A	USB Input Tool Direct (Digimatic to USB), 2m Cable, Digimatic/Digimatic 2, with Data Button IP Caliper Type
264-620	U-WAVE fit, IP67 Type, Wireless Transmitter for Caliper
264-621	U-WAVE fit, Buzzer Type, Wireless Transmitter for Caliper
264-624	U-WAVE fit Bluetooth, IP67 Type, Wireless Transmitter for Caliper
264-625	U-WAVE fit Bluetooth, Buzzer Type, Wireless Transmitter for Caliper
02AZF310	Connection Unit for IP Caliper, Micrometer, with Data Button for U-WAVE fit, U-WAVE fit Bluetooth

Consumable spares

No.	Description
63AAA800	Battery SR44 1,5 V



Series 573

These offset calipers enable you to measure stepped workpieces. They offer you the following benefits:

- You can adjust the beam-mounted jaw to facilitate measurement of stepped sections and hard-to-reach workpiece features.

Dust- and Water-Protected

ABSOLUTE

IP67



573-602-20

Metric — Without thumb roller

No.	Range [mm]	Depth bar	Max. Permissible Error E MPE	Max. Permissible Error S MPE	a [mm]	b [mm]	c [mm]	d [mm]	Mass [g]
573-611-20	0–150	Flat	±0,02 mm	±0,04 mm	95	10	40	30	168
573-612-20	0–200	Flat	±0,02 mm	±0,04 mm	95	10	50	38,5	198
573-614-20	0–300	Flat	±0,03 mm	±0,05 mm	135	15	64	51	380

Metric — With thumb roller

No.	Range [mm]	Depth bar	Max. Permissible Error E MPE	Max. Permissible Error S MPE	a [mm]	b [mm]	c [mm]	d [mm]	Mass [g]
573-601-20	0–150	Flat	±0,02 mm	±0,04 mm	95	10	40	30	168
573-602-20	0–200	Flat	±0,02 mm	±0,04 mm	95	10	50	38,5	198
573-604-20	0–300	Flat	±0,03 mm	±0,05 mm	135	15	64	51	970

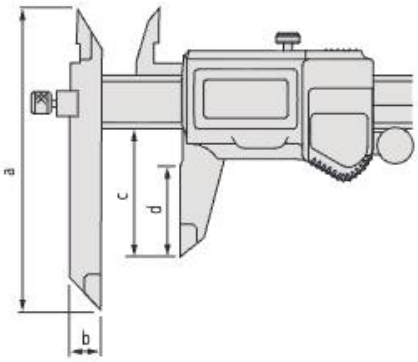

All products to be sold to commercial customers.
Product illustrations are without obligation. Product descriptions, in particular any and all technical specifications, are only binding when explicitly agreed upon.

Mitutoyo