ABSOLUTE Digimatic Back-Jaw Centreline Calipers

Functions	Series 573
ORIGIN (ABS-Zero)	●
PRESET	●
ABS / INC (INC ZERO)	●
Low voltage alarm	●
Data output	●

Specifications

Digital step	0,01 mm
Max. response speed	Unlimited
Display	LCD, character height 11 mm
OFFSET	10 mm
Battery life	Approx. 5 years under normal use
Delivered	In a case, including 1 battery

Optional accessories

No.	Description
05CZA624	Digimatic Cable with Data Button IP Type, 1 m, Caliper Type
05CZA625	Digimatic Cable with Data Button IP Type, 2 m, Caliper Type
06AFM380A	USB Input Tool Direct (Digimatic to USB), 2m Cable, Digimatic/Digimatic 2, with Data Button IP Caliper Type
02AZD730G	U-WAVE-T, IP67 Type, Wireless Transmitter
02AZD880G	U-WAVE-T, Buzzer Type, Wireless Transmitter
02AZD790A	Connection Cable A for U-WAVE, with Data Button for IP Caliper Type

Consumable spares

No.	Description
63AAA800	Battery SR44 1,5 V

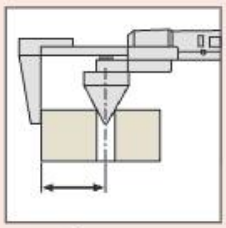

Edge-to-center type



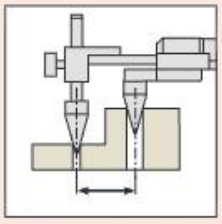

Centre-to-centre type



Series 573

Dust- and Water-Protected

ABSOLUTE IP67

The ABSOLUTE Digimatic back-jaw centreline calipers offer you the following benefits:

- Specially designed to allow you to measure hole centre-to-centre or edge-to-centre distances.
- You can read measurements more easily from above, thanks to the jaws being on the back of the slide.
- Direct reading of pitch measurements is also available due to the offset value setting function.



573-716-20
Centre-to-centre type



573-718-20
Edge-to-centre type

Metric — Centre-to-centre type

No.	Range [mm]	Depth bar	Max. Permissible Error S MPE	Mass [g]
573-716-20	10,1–200	Without	±0,1 mm	465
573-717-20	10,1–300	Without	±0,15 mm	550

Metric — Edge-to-centre type

No.	Range [mm]	Depth bar	Max. Permissible Error S MPE	Mass [g]
573-718-20	10,1–200	Without	±0,1 mm	470
573-719-20	10,1–300	Without	±0,15 mm	555

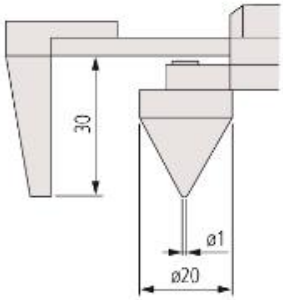

573-718-20
573-719-20

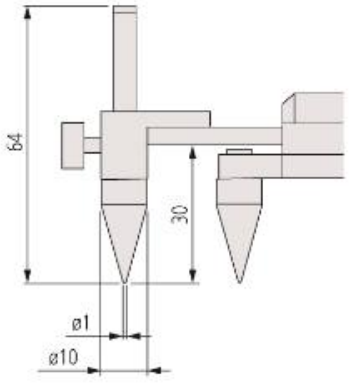

573-716-20
573-717-20

All products to be sold to commercial customers.
Product illustrations are without obligation. Product descriptions, in particular any and all technical specifications, are only binding when explicitly agreed upon.

Mitutoyo