ABSOLUTE Digimatic Calipers for Tolerance Measurement

Functions	Series 573
ORIGIN (ABS-Zero)	●
ON/OFF	●
ABS / INC (INC ZERO)	●
Low voltage alarm	●
Data output	●

Specifications

Digital step	0,01 mm
Max. response speed	Unlimited
Measuring force	7-14 N
Jaw retraction	2 mm
Display	LCD, character height 9 mm
Battery life	Approx. 18000 hours
Delivered	In a case, including 1 battery

Optional accessories

No.	Description
959149	Digimatic Cable, Straight, Data Button, 1 m
959150	Digimatic Cable, Straight, Data Button, 2 m
06AFM380C	USB Input Tool Direct (Digimatic to USB), 2m Cable, Digimatic/Digimatic 2, Straight, with Data Button
264-620	U-WAVE fit, IP67 Type, Wireless Transmitter for Caliper
264-621	U-WAVE fit, Buzzer Type, Wireless Transmitter for Caliper
264-624	U-WAVE fit Bluetooth, IP67 Type, Wireless Transmitter for Caliper
264-625	U-WAVE fit Bluetooth, Buzzer Type, Wireless Transmitter for Caliper
02AZF310	Connection Unit for IP Caliper, Micrometer, with Data Button for U-WAVE fit, U-WAVE fit Bluetooth
959143	Data Hold Unit, for Digital Caliper

Consumable spares

No.	Description
63AAA800	Battery SR44 1,5 V

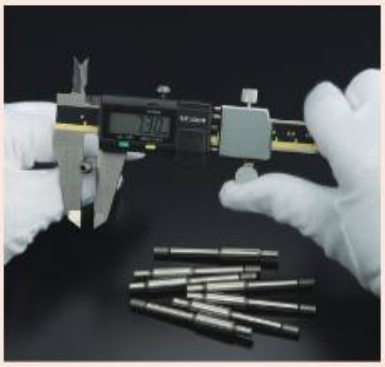

Series 573

ABSOLUTE®

The ABSOLUTE Digimatic snap caliper for tolerance measurement features a spring-loaded mechanism to allow quick and efficient GO/±NO-GO inspection for mass produced parts.

- Large character height (alleviation of fatigue with the high-contrast LCD)
- The ABS (ABSOLUTE) scale requires no origin setting after power-on and also has no limit to response speed.
- Extraordinary battery life.

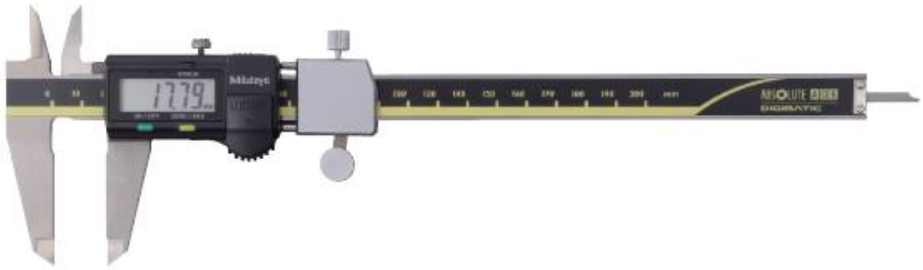

573-182-30

Metric

No.	Range [mm]	Depth bar	Max. Permissible Error E MPE	Max. Permissible Error S MPE	L [mm]	a [mm]	b [mm]	c [mm]	d [mm]	Mass [g]
573-181-30	0–100	Flat	±0,02 mm	±0,04 mm	233	40	21	16,5	16	213
573-182-30	0–150	Flat	±0,02 mm	±0,04 mm	290	50	24,5	20	16	233

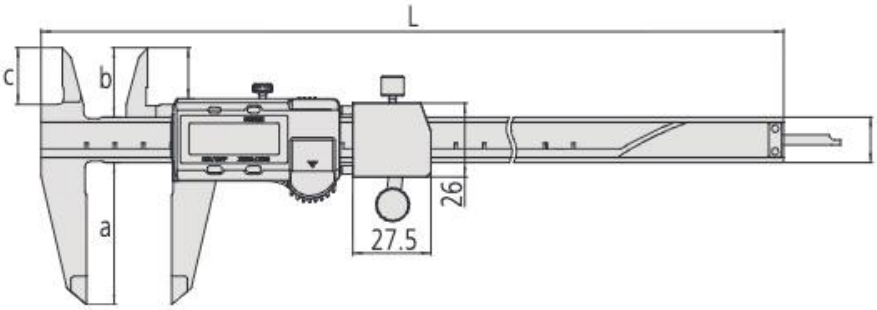

All products to be sold to commercial customers.
Product illustrations are without obligation. Product descriptions, in particular any and all technical specifications, are only binding when explicitly agreed upon.

Mitutoyo