Micrometer Stands

Series 156

This is a micrometer stand that offers you the following benefits:

- Keeps both hands free for operating the micrometer and positioning the workpiece.
- Designed for batch or mass production measurements in manufacturing and quality assurance.



156-105-10



156-101-10



156-102







No.	Applicable measuring range	Remarks	Mass [g]
156-105-10	0 - 50 mm	Fixed angle type 45°	700
156-101-10	0 - 100 mm	Adjustable angle type	1210
156-102	100 - 300 mm	Vertical type	9000
156-103	300 - 1000 mm	Vertical type	8500

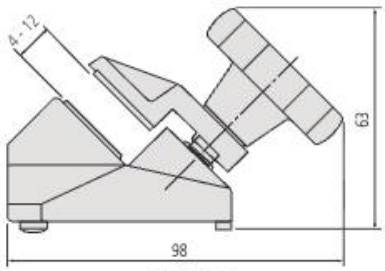

156-105-10

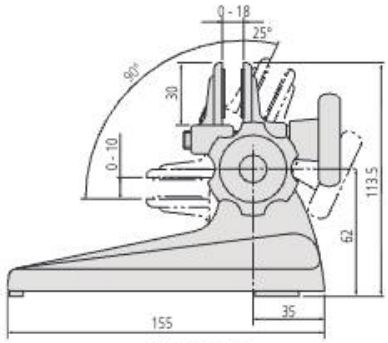

156-101-10

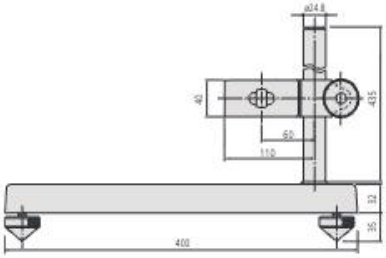

156-102

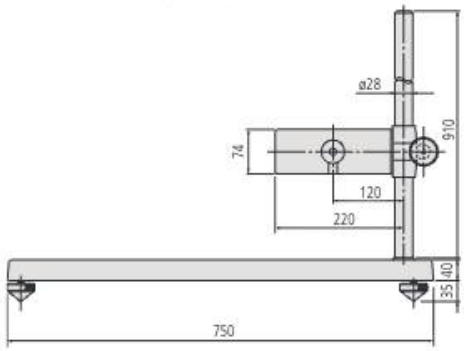

156-103

All products to be sold to commercial customers.
Product illustrations are without obligation. Product descriptions, in particular any and all technical specifications, are only binding when explicitly agreed upon.