SERIES 116 DIGITAL CALIPER WITH CARBIDE TIPPED JAWS





116-006-11

unit: mm

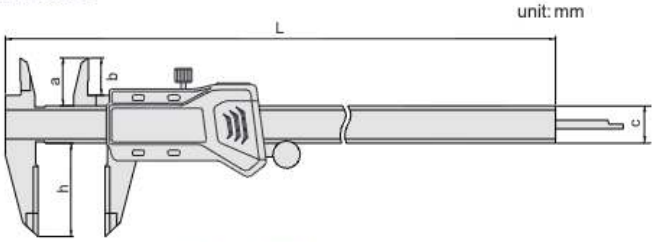

- Carbide tipped jaws for inside and outside measurements, good wear-resistance
- Resolution: 0.01mm/0.0005"
- Buttons: on/off, zero, mm/in, INC
- Data output(cable code:100-03 or 100-04)
- Automatic power on/off
- Made of stainless steel



Carbide tipped jaws

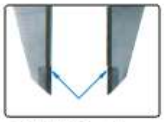

Carbide tipped jaws

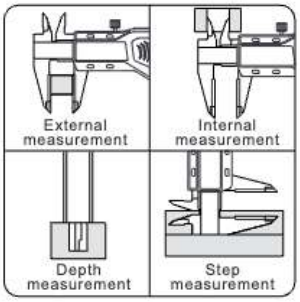

Code	Range	Accuracy	a	b	c	h	L
116-006-11	0-150mm/0-6"	±0.03mm	21	16	16	40	236
116-008-11	0-200mm/0-8"	±0.03mm	24	19	16	50	286
116-012-11	0-300mm/0-12"	±0.03mm	25	20.5	16	60	390

With manufacturer inspection certificate