SERIES 122 VERNIER CALIPER

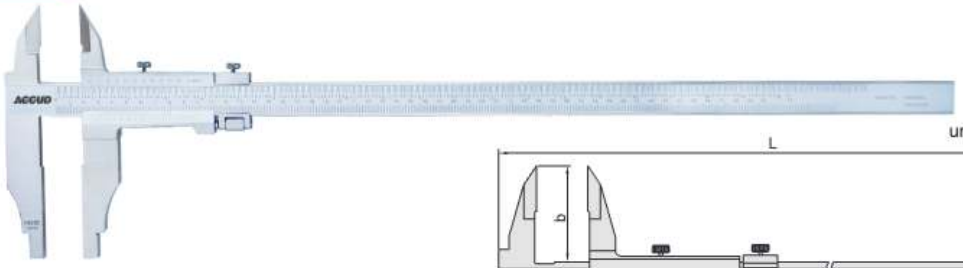

122-020-21

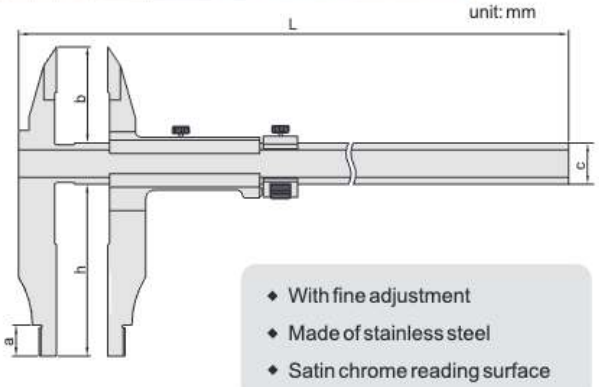

- With fine adjustment
- Made of stainless steel
- Satin chrome reading surface

Graduation: 0.02mm/0.001"

Code	Range	Accuracy	h	a	b	c	w	L
122-012-21	0-300mm/0-12"	±0.05mm	90	12	40	20	10	410
122-020-21	0-500mm/0-20"	±0.05mm	100	18	56	24	20	670
122-020-22	0-500mm/0-20"	±0.06mm	150	18	56	24	20	670
122-032-21	0-800mm/0-32"	±0.07mm	150	24	67	31	20	1020
122-040-21	0-1000mm/0-40"	±0.08mm	150	24	67	31	20	1220

Graduation: 0.05mm/1/128"

Code	Range	Accuracy	h	a	b	c	w	L
122-012-51	0-300mm/0-12"	±0.07mm	90	12	40	20	10	410
122-020-51	0-500mm/0-20"	±0.07mm	100	18	56	24	20	670
122-020-52	0-500mm/0-20"	±0.08mm	150	18	56	24	20	670
122-032-51	0-800mm/0-32"	±0.09mm	150	24	67	31	20	1020
122-040-51	0-1000mm/0-40"	±0.12mm	150	24	67	31	20	1220

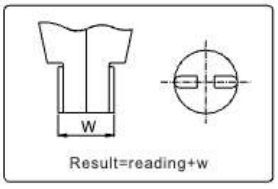

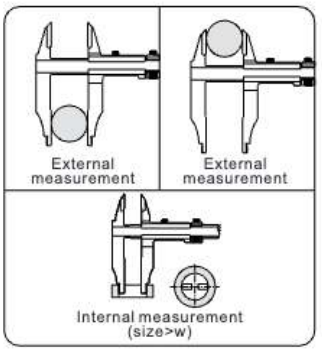

SERIES 122 VERNIER CALIPER

- With fine adjustment
- Made of stainless steel
- Satin chrome reading surface

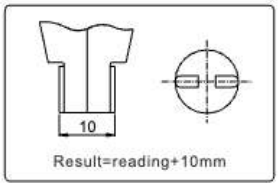

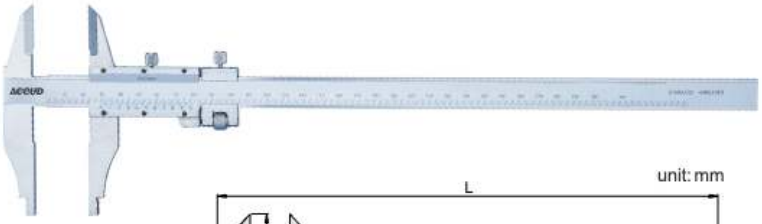

122-012-11

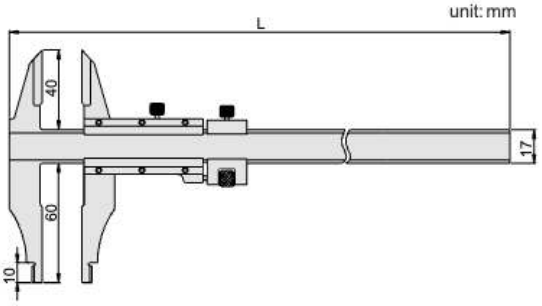

Graduation: 0.02mm

	Code	Range	Accuracy	L
* NEW	122-010-11	0-250mm	±0.03mm	360
	122-012-11	0-300mm	±0.03mm	410

Graduation: 0.05mm

	Code	Range	Accuracy	L
* NEW	122-010-13	0-250mm	±0.05mm	360
* NEW	122-012-13	0-300mm	±0.05mm	410

