SERIES 125 VERNIER CALIPER

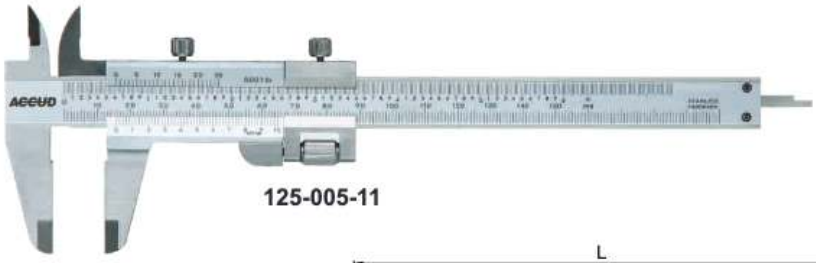

125-005-11

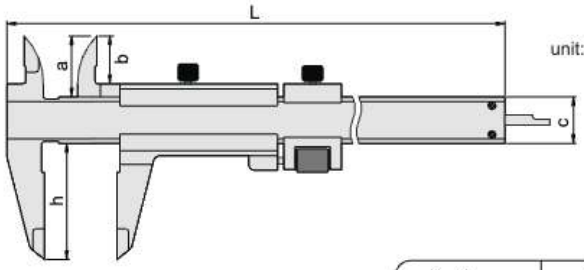

unit: mm

- With fine adjustment
- Graduation: 0.02mm/0.001"
- Meet DIN862
- Satin chrome plated reading surface
- Made of stainless steel

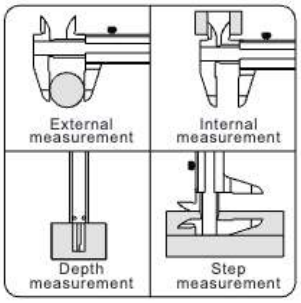

Code	Range	Accuracy	a	b	c	h	L
125-005-11	0-130mm/0-5"	±0.03mm	20.5	16.5	16	40	230
125-007-11	0-180mm/0-7"	±0.03mm	23.5	19	16	50	295
125-011-11	0-280mm/0-11"	±0.03mm	27.5	22	20	60	410