# SERIES 131 DIGITAL CALIPER

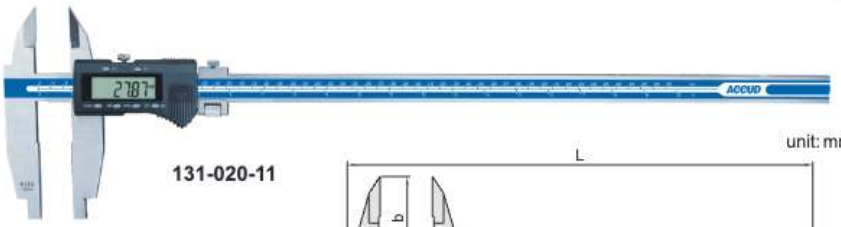


131-020-11

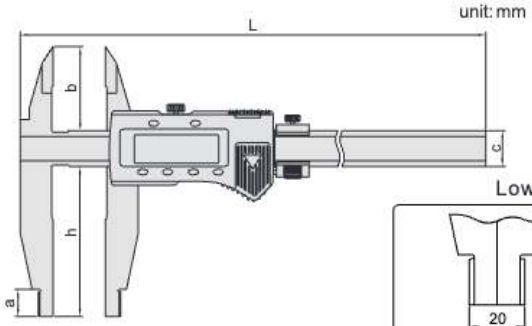


- Resolution: 0.01mm/0.0005"
- Buttons: on/off, zero, mm/inch, ABS, data preset
- Data output(cable code:100-15)
- Made of stainless steel

Low jaws

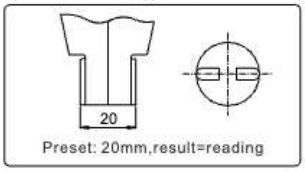


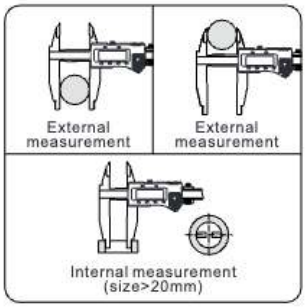


| Code | Range | Accuracy | a | b | c | h | L |
|---|---|---|---|---|---|---|---|
| 131-012-11 | 0-300mm/0-12" | ±0.05mm | 18 | 56 | 24 | 100 | 470 |
| 131-020-11 | 0-500mm/0-20" | ±0.05mm | 18 | 56 | 24 | 100 | 675 |
| 131-020-12 | 0-500mm/0-20" | ±0.06mm | 18 | 56 | 24 | 150 | 675 |
| 131-024-11 | 0-600mm/0-24" | ±0.05mm | 18 | 56 | 24 | 100 | 770 |
| 131-028-11 | 0-800mm/0-32" | ±0.07mm | 24 | 67 | 31 | 150 | 1025 |
| 131-040-11 | 0-1000mm/0-40" | ±0.08mm | 24 | 67 | 31 | 150 | 1220 |