SERIES 142 DIGITAL RTJ RING GROOVE CALIPER

Data output

CR2032

Preset buttons



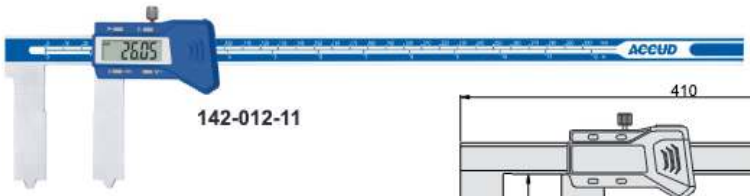

142-012-11

unit: mm

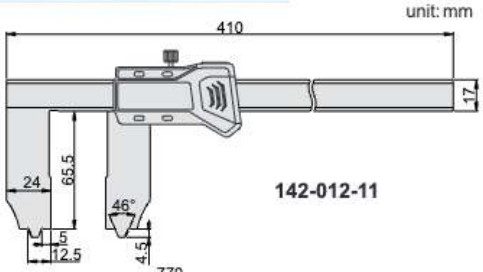

142-012-11

- Measure ring grooves of flange
- Resolution: 0.01mm/0.0005"
- Automatic power on/off
- Buttons: mm/in, SET, preset(P+,P-)
- Preset: 25mm, don't need to add the width of the jaws on the reading
- Data output
- Made of stainless steel

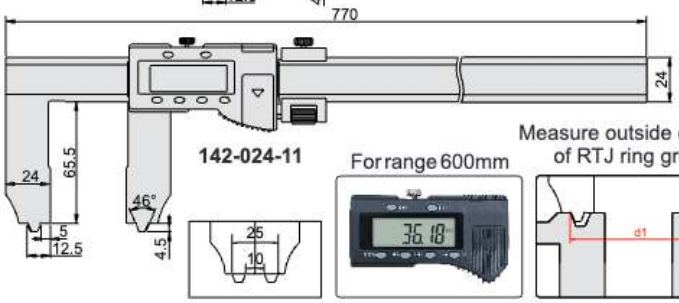

142-024-11

For range 600mm

Measure outside diameter of RTJ ring groove

Measure inside diameter of RTJ ring groove

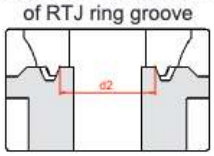

Code	Range (inside diameter of RTJ ring groove)	Range (outside diameter of RTJ ring groove)	Angle of RTJ ring groove	Accuracy
142-012-11	10-300mm/0.4-12"	25-300mm/1-12"	23°	±0.06mm
142-024-11	10-600mm/0.4-24"	25-600mm/1-24"	23°	±0.07mm