148 DIGITAL CENTERLINE/EDGE TO CENTER CALIPER

Data output

CR2032

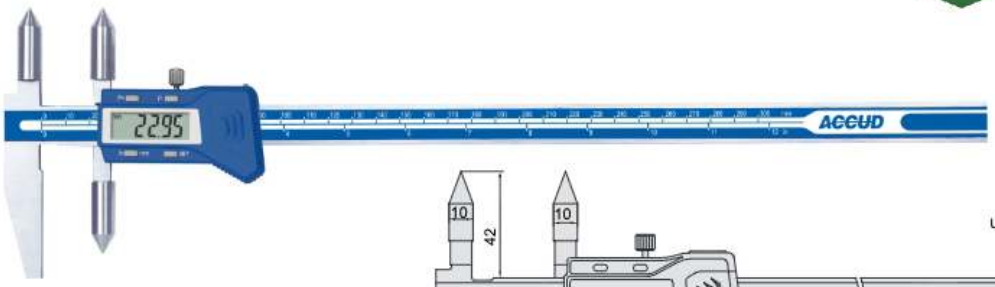

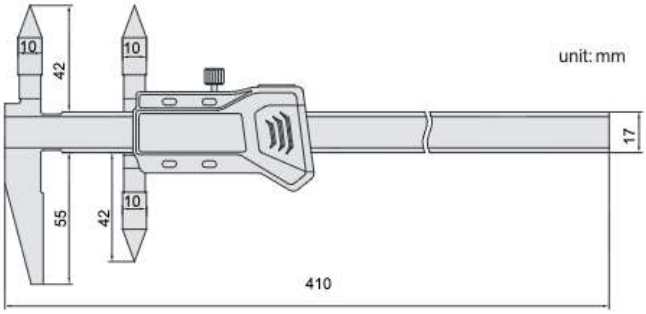

unit: mm

- Measure hole center distance or edge to hole center distance
- Resolution: 0.01mm/0.0005"
- Buttons: mm/in, SET, preset(P+,P-)
- Data output(cable code: 100-03 or 100-04)
- Automatic power on/off
- Made of stainless steel

preset buttons



measure edge to hole center distance

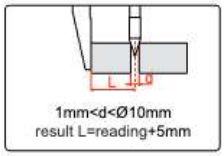

measure hole center distance

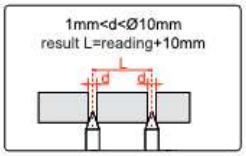

Code	Range of upper jaw (center to center)	Range of lower jaw (edge to center)	Accuracy
148-012-11	10-300mm/0.4-12"	5-300mm/0.2-12"	±0.08mm