SERIES 151 DIGITAL OFFSET CENTERLINE CALIPER

Data output | CR2032

VIDEO

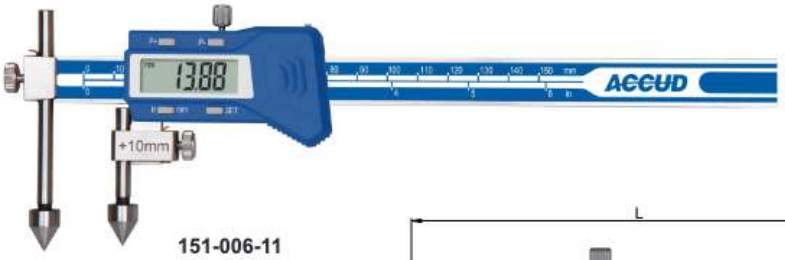

151-006-11

unit: mm

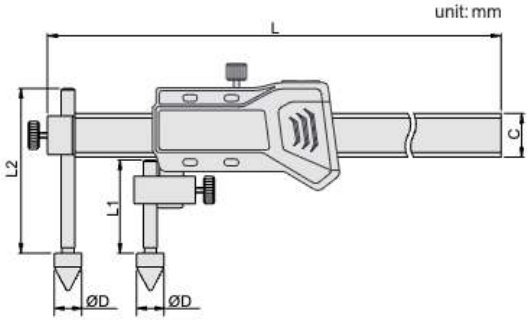

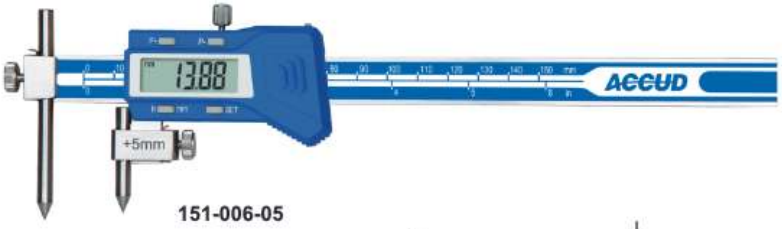

151-006-05

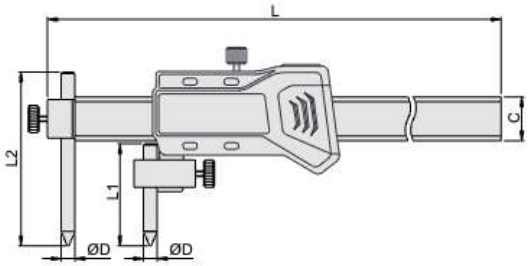

- Measure the hole center-to-center distance in same plane, or between offset planes
- Resolution: 0.01mm/0.0005"
- Automatic power on/off
- Buttons: mm/in, SET, preset(P+,P-)
- Data output
- Made of stainless steel

For range 500mm or above



Preset buttons



Code	Range	Accuracy	c	ØD	L1	L2	L
151-006-11	10-150mm/0.4-6"	±0.05mm	16	10	32	65	236
151-008-11	10-200mm/0.4-8"	±0.07mm	16	10	32	65	306
151-012-11	10-300mm/0.4-12"	±0.09mm	16	10	32	65	396
151-020-11	20-500mm/0.8-20"	±0.09mm	24	20	48	88	686
151-040-11	30-1000mm/1.2-40"	±0.12mm	31	30	42	88	1242

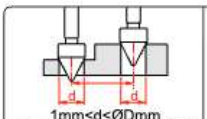

1mm<d<ØDmm
preset: ØD, result=reading

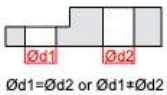

Ød1=Ød2 or Ød1≠Ød2
both can be measured

★ NEW

Code	Range	Accuracy	c	ØD	L1	L2	L
151-006-05	5-150mm/0.2-6"	±0.05mm	16	5	34	60	236
151-008-05	5-200mm/0.2-8"	±0.07mm	16	5	34	60	306
151-012-05	5-300mm/0.2-12"	±0.09mm	16	5	34	60	396