SERIES 152 DIGITAL OFFSET CALIPER

Data output | CR2032

- Adjust the beam-mounted jaw to facilitate measurement of stepped sections and hard-to reach workpiece
- Resolution: 0.01mm/0.0005"
- Automatic power on/off
- Buttons: on/off, zero, mm/in, INC
- Data output(cable code: 100-03 or 100-04)
- Made of stainless steel

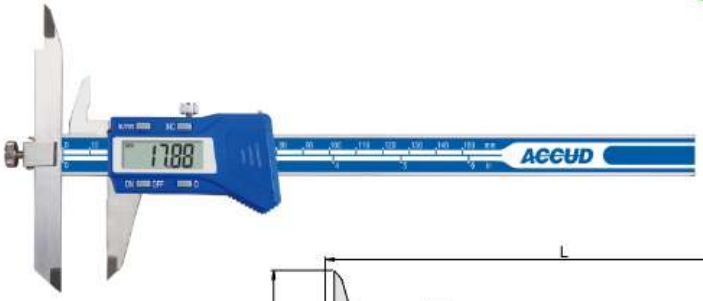

152-006-11

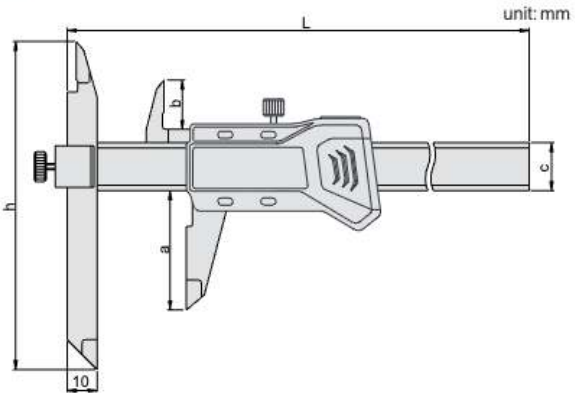

Code	Range	Accuracy	a	b	c	h	L
152-006-11	0-150mm/0-6"	±0.04mm	40	16.5	16	110	239
152-008-11	0-200mm/0-8"	±0.04mm	50	19.5	16	120	289
152-012-11	0-300mm/0-12"	±0.05mm	60	20.5	17	130	399

