SERIES 153 DIGITAL BLADE CALIPER

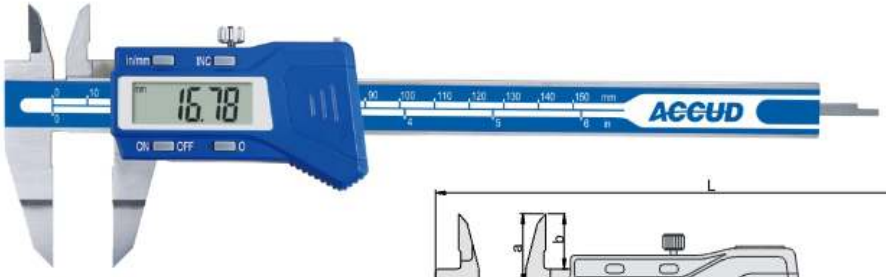

153-006-11

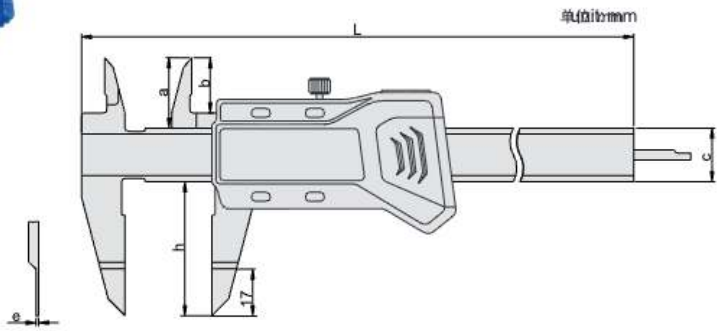

- Measure small grooves
- Resolution: 0.01mm/0.0005"
- Automatic power on/off
- Buttons: on/off, zero, mm/in, INC
- Data output(cable code: 100-03 or 100-04)
- Made of stainless steel

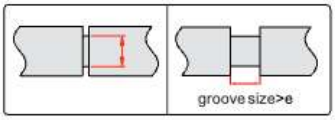

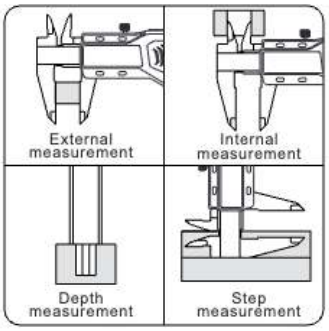

Code	Range	Accuracy	a	b	c	h	e	L
153-006-11	0-150mm/0-6"	±0.03mm	21	16	16	40	0.75	235
153-008-11	0-200mm/0-8"	±0.03mm	24	19	16	50	0.75	297
153-012-11	0-300mm/0-12"	±0.04mm	26	20.5	16	60	1.00	390