158 DIGITAL DRUM BRAKE CALIPER



- Measure internal and external diameter of drum brakes
- Resolution 0.01mm/0.0005"
- Buttons: on/off, zero, mm/in, INC
- Automatic power on/off
- Data output(cable code: 100-03 or 100-04)
- Made of stainless steel

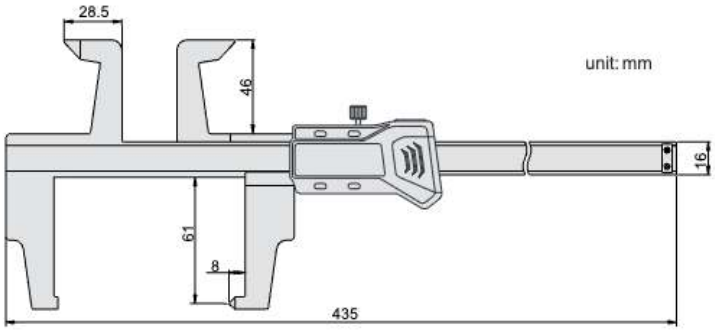

Code	Range	Accuracy
158-012-11	0-300mm/0-12"	±0.07mm