SERIES 162 OFFSET VERNIER CALIPER

- Adjust the beam-mounted jaw to facilitate measurement of stepped sections and hard-to reach workpiece
- Made of stainless steel
- Satin chrome plated reading surface

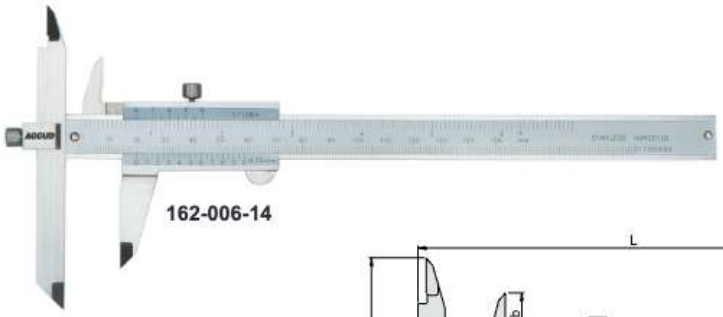

162-006-14

unit: mm

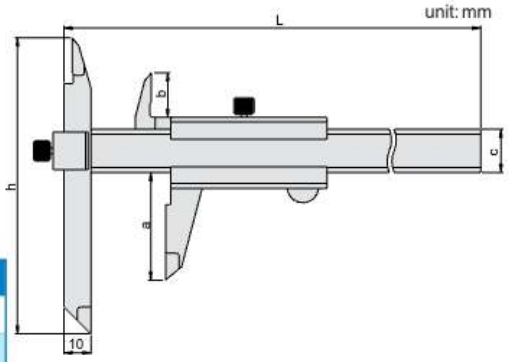

Graduation 0.02mm/0.001"

Code	Range	Accuracy	a	b	c	h	L
162-006-12	0-150mm/0-6"	±0.04mm	40	16.5	16	110	239
162-008-12	0-200mm/0-8"	±0.04mm	50	19.5	16	120	289
162-012-12	0-300mm/0-12"	±0.05mm	60	20.5	17	130	389

Graduation 0.05mm/1/128"

Code	Range	Accuracy	a	b	c	h	L
162-006-14	0-150mm/0-6"	±0.05mm	40	16.5	16	110	239
162-008-14	0-200mm/0-8"	±0.05mm	50	19.5	16	120	289
162-012-14	0-300mm/0-12"	±0.08mm	60	20.5	17	130	389

