SERIES 167 DIGITAL CALIPER WITH LARGE MEASURING FACES

Data output

CR2032



167-008-11

unit: mm

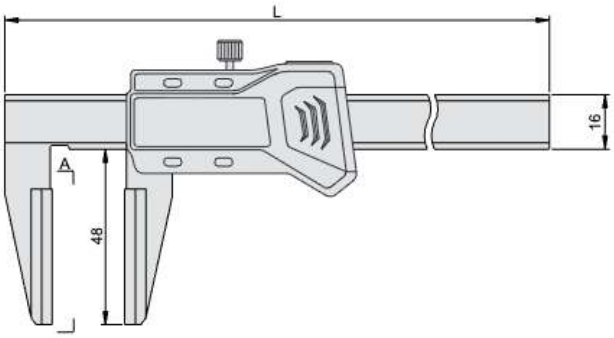

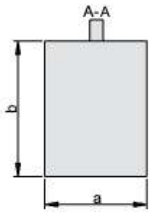

- Measure diameter of wire ropes, and thickness of soft materials like rubber, etc.
- Resolution: 0.01mm/0.0005"
- Buttons: on/off, zero, mm/in, INC
- Automatic power on/off
- Data output(cable code: 100-03 or 100-04)
- Made of stainless steel

Measure thickness of rubber



Measure diameter of wire ropes

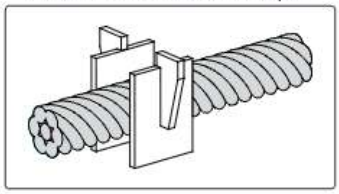

	Code	Range	Accuracy	a	b	L
* NEW	167-006-11	0-150mm/0-6"	±0.07mm	20	30	250
	167-008-11	0-200mm/0-8"	±0.07mm	30	40	300
* NEW	167-012-11	0-300mm/0-12"	±0.07mm	40	50	400