SERIES 169 DIGITAL ARC RADIUS CALIPER



unit: mm

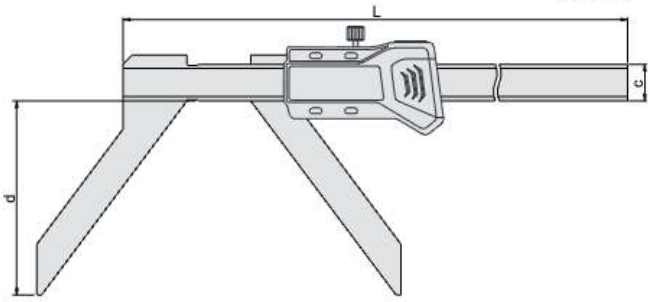

- Measure the radius of arc less than half round
- Resolution: 0.01mm/0.0005"
- Buttons: on/off, zero, mm/in, INC
- Automatic power on/off
- Data output(cable code: 100-03 or 100-04)
- Made of stainless steel

Code	Range (R)	Accuracy	c	d	L
169-006-11	5-150mm/0.2-6"	±0.05mm	16	65	263
169-008-11	5-200mm/0.2-8"	±0.07mm	16	85	313

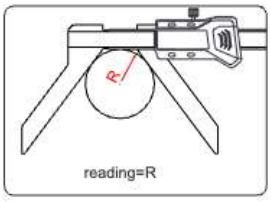

reading=R

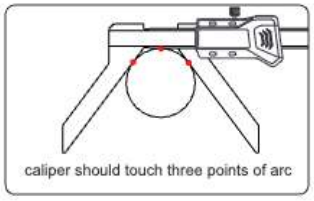

caliper should touch three points of arc