SERIES 322 MICRO GRADUATION OUTSIDE MICROMETER

- Graduation: 0.001mm
- Carbide measuring faces
- Ratchet stop
- Setting standards are included (except **322-001-01**)

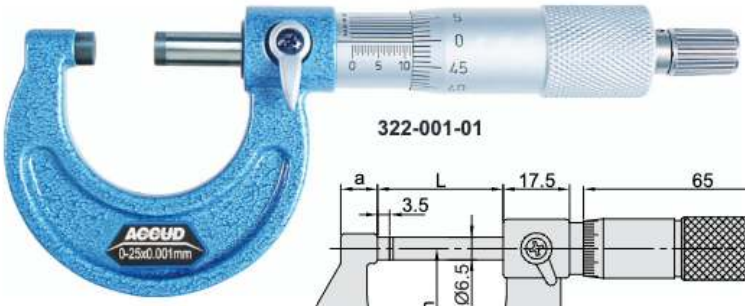

322-001-01

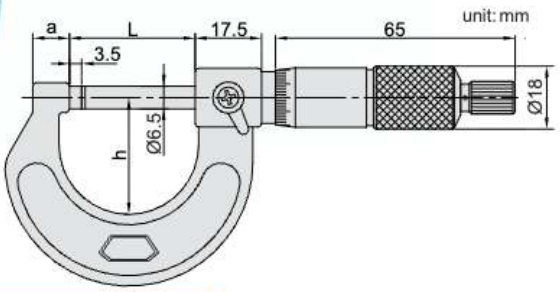

Code	Range	Accuracy	a	h	L	Setting standards(included)
322-001-01*	0-25mm	4μm	9	29	32	-
322-002-01*	25-50mm	4μm	9	39	58	25mm
322-003-01*	50-75mm	5μm	10	53	83	50mm
322-004-01*	75-100mm	5μm	10	65	109	75mm
322-005-01	100-125mm	6μm	11.5	76	133	100mm
322-006-01	125-150mm	6μm	11.5	88	159	125mm
322-007-01	150-175mm	7μm	11.5	101	185	150mm
322-008-01	175-200mm	7μm	11.5	114	210	175mm

* **With manufacturer inspection certificate**

Setting standards (included)

