HEIKENEI
wir produzieren industrielle lösungen

## Aufsteckfräser ISO ROUNDCUT / RD.. 12
## Face milling cutter ISO ROUNDCUT / RD.. 12

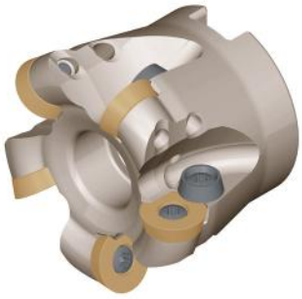

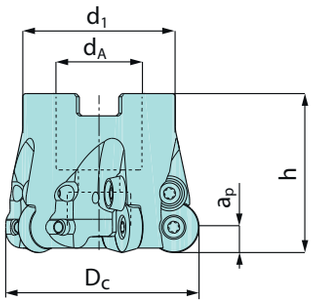





| Abmessungen [mm] Dimension [mm] | | | | | | Artikelbezeichnung Item Code | Bestell-Nr. Order No | Verfüg. Availability | Platten Insert | Ersatzteile Spare parts | | |
|---|---|---|---|---|---|---|---|---|---|---|---|---|
| Dc | $d_A$ | $d_1$ | h | $a_p$ | z | | | | | | | |
| 42 | 16 | 32 | 40 | 6 | 4 | HMF00 RD12.042 Z04 | 2219100 | • | RD.. 12 | Torx-Schlüssel Torque wrench HKE13-46197 5003900 MA = 3,5Nm | Torx-Schlüssel Torque wrench IP15 5001100 | Spann-schraube-Clamping screw RD12 5004800 |
| 48 | 22 | 40 | 50 | 6 | 4 | HMF00 RD12.048 Z04 | 2219200 | • | | | | |
| 50 | 22 | 40 | 50 | 6 | 5 | HMF00 RD12.050 Z05 | 2219300 | • | | | | |
| 52 | 22 | 40 | 50 | 6 | 5 | HMF00 RD12.052 Z05 | 2219400 | • | | | | |
| 63 | 27 | 48 | 50 | 6 | 6 | HMF00 RD12.063 Z06 | 2219500 | • | | | | |
| 66 | 27 | 48 | 50 | 6 | 6 | HMF00 RD12.066 Z06 | 2219600 | • | | | | |
| 80 | 27 | 60 | 52 | 6 | 7 | HMF00 RD12.080 Z07 | 2219700 | • | | | | |
| | | | | | | | | | | | | |

## Aufsteckfräser ISO ROUNDCUT / RD.. 12 / INCH
## Face milling cutter ISO ROUNDCUT / RD.. 12 / INCH

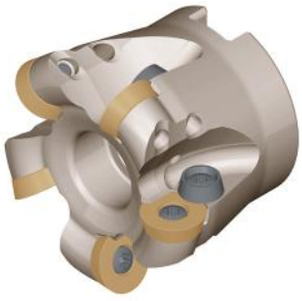

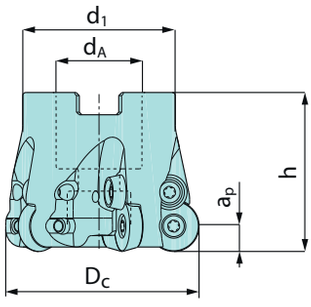





| Abmessungen [INCH] Dimension [INCH] | | | | | | Artikelbezeichnung Item Code | Bestell-Nr. Order No | Verfüg. Availability | Platten Insert | Ersatzteile Spare parts | | |
|---|---|---|---|---|---|---|---|---|---|---|---|---|
| $D_c$ | $d_A$ | $d_1$ | h | $a_p$ | z | | | | | | | |
| 2.0 | 0.75 | 1.70 | 2.0 | 0.236 | 5 | HMFU00 RD12.2000 Z05-INCH | 2246300 | ○ | RD.. 12 | Spann-schraube Fastening screw HKE13-46197 5003900 MA = 3,5Nm | Torx-Schlüssel Torque wrench IP15 5001100 | Spann-schraube Clamping screw RD12 5004800 |
| 2.5 | 1.00 | 2.20 | 2.0 | 0.236 | 6 | HMFU00 RD12.2500 Z06-INCH | 2246400 | ○ | | | | |
| 3.0 | 1.00 | 2.30 | 2.0 | 0.236 | 7 | HMFU00 RD12.3000 Z07-INCH | 2246500 | ○ | | | | |
| | | | | | | | | | | | | |
| | | | | | | | | | | | | |
| | | | | | | | | | | | | |
| | | | | | | | | | | | | |

## Einschraubfräser ISO ROUNDCUT konisch Form A / RD.. 12



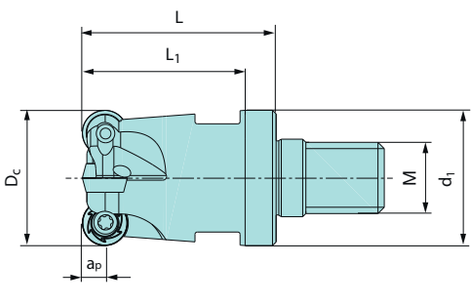





| Abmessungen [mm] Dimension [mm] | | | | | | | Artikelbezeichnung Item Code | Bestell-Nr. Order No | Verfüg. Availability | Platten Insert | Ersatzteile Spare parts | | |
|---|---|---|---|---|---|---|---|---|---|---|---|---|---|
| Dc | $d_1$ | L | L1 | $a_p$ | z | M | | | | | | | |
| 32 | 29 | 43 | 38 | 6 | 3 | 16 | HMSA00 RD12.032 Z03-M16 | 2261300 | • | RD.. 12 | Spann-schraube Fastening screw HKE13-46197 5003900 MA = 3,5Nm | Torx-Schlüssel Torque wrench IP15 5001100 | Spann-schraube-Clamping screw RD12 5004800 |

## Einschraubfräser ISO ROUNDCUT zylindrisch Form B / RD.. 12
## Screw on type ISO ROUNDCUT cylindrical form B / RD.. 12



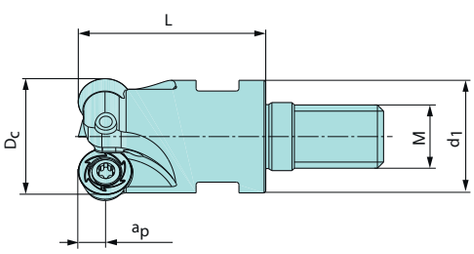





| Abmessungen [mm] Dimension [mm] | | | | | | Artikelbezeichnung Item Code | Bestell-Nr. Order No | Verfüg. Availability | Platten Insert | Ersatzteile Spare parts | | |
|---|---|---|---|---|---|---|---|---|---|---|---|---|
| Dc | $d_1$ | L | $a_p$ | z | M | | | | | | | |
| 24 | 21 | 33 | 6 | 2 | 12 | HMSB00 RD12.024 Z02-M12 | 2263400 | ○ | RD.. 12 | Spann-schraube Fastening screw HKE13-46197 5003900 MA = 3,5Nm | Torx-Schlüssel Torque wrench IP15 5001100 | Spann-schraube Clamping screw RD12 5004800 |
| 25 | 21 | 35 | 6 | 2 | 12 | HMSB00 RD12.025 Z02-M12 | 2263500 | • | | | | |
| 35 | 29 | 43 | 6 | 3 | 16 | HMSB00 RD12.035 Z03-M16 | 2263600 | • | | | | |
| 40 | 29 | 43 | 6 | 2 | 16 | HMSB00 RD12.040 Z04-M16 | 2263700 | • | | | | |
| 42 | 29 | 43 | 6 | 4 | 16 | HMSB00 RD12.042 Z04-M16 | 2263800 | • | | | | |

## Schaftfräser / RP.. 10
## End milling cutter / RP.. 10



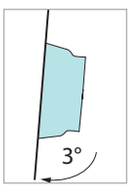

HME03

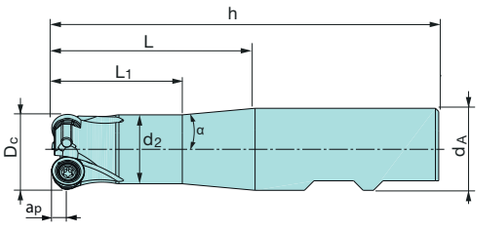


| Abmessungen [mm] Dimensions [mm] | | | | | | | | | Artikelbezeichnung Item Code | Schaft Shank | Bestell-Nr. Ordering-No | Verfüg. Availability | Ersatzteile Spare parts | |
|---|---|---|---|---|---|---|---|---|---|---|---|---|---|---|
| Dc | $d_A$ | d2 | L | L1 | a | h | $a_p$ | z | | | | | | |
| 25 | 25 | 21 | 60 | 39,8 | 10,2 | 118 | 5 | 3 | HME03 RP10.025 Z03 | SW | 2204200 | ○ | Spannschraube Fastening screw HKE13-46183 5003800 MA = 3,5Nm | Torx-Schlüssel Torque wrench IP15 5001100 |

## Einschraubfräser / RP.. 10
## Screw on type / RP.. 10



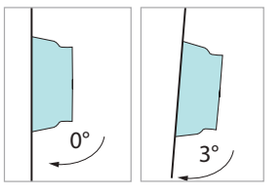

HMS00 HMS03

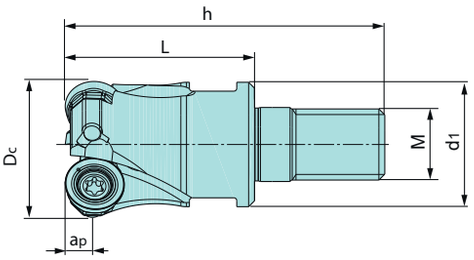


| Abmessungen [mm] Dimensions [mm] | | | | | | Artikelbezeichnung Item Code | Bestell-Nr. Order No | Verfüg. Availability | Ersatzteile Spare parts | |
|---|---|---|---|---|---|---|---|---|---|---|
| Dc | $d_A$ | L | $a_p$ | M | z | | | | | |
| 32 | 29 | 40 | 5 | 16 | 4 | HMS00 RP10.032 Z04-M16 | 2255400 | ○ | Spann-schraube Fastening screw HKE13-46197 5003900 MA = 3,5Nm | Torx-Schlüssel Torque wrench IP15 5001100 |
| 40 | 29 | 43 | 5 | 16 | 5 | HMS00 RP10.040 Z05-M16 | 2255500 | = | | |
| 25 | 21 | 32 | 5 | 12 | 3 | HMS03 RP10.025 Z03-M12 | 2255600 | = | | |
| 32 | 29 | 40 | 5 | 16 | 4 | HMS03 RP10.032 Z04-M16 | 2255700 | = | | |