DIGITAL CALIPERS

DATA OUTPUT



1117-501

- Non waterproof
- Resolution: 0.01mm/0.0005"
- Button function: on/off, zero, mm/inch, ABS, data preset
- Battery CR2032
- Made of stainless steel
- Optional accessory: accessory set for large digital calipers (code **6145-500/6146-500B**, for calipers with c=24mm)

With data interface (optional wireless transmitter code 7315-22, receiver is needed page 7)

Code	Range	Accuracy	a	b	c	d	e	L
1117-301	0-300mm/0-12"	±0.05mm	18mm	56mm	24mm	100mm	20mm	420mm
1117-501	0-500mm/0-20"	±0.05mm	18mm	56mm	24mm	100mm	20mm	675mm
1117-502	0-500mm/0-20"	±0.06mm	24mm	56mm	24mm	150mm	20mm	675mm
1117-601	0-600mm/0-24"	±0.05mm	18mm	56mm	24mm	100mm	20mm	770mm
1117-802	0-800mm/0-32"	±0.07mm	24mm	67mm	31mm	150mm	20mm	1025mm
1117-1002	0-1000mm/0-40"	±0.08mm	24mm	67mm	31mm	150mm	20mm	1220mm

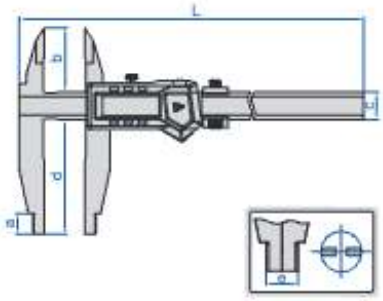

Built-in wireless (receiver code 7315-2/3/6/7/8/9 is needed)

Code	Range	Accuracy	a	b	c	d	e	L
1117-301WL	0-300mm/0-12"	±0.05mm	18mm	56mm	24mm	100mm	20mm	420mm
1117-501WL	0-500mm/0-20"	±0.05mm	18mm	56mm	24mm	100mm	20mm	675mm
1117-502WL	0-500mm/0-20"	±0.06mm	24mm	56mm	24mm	150mm	20mm	675mm
1117-601WL	0-600mm/0-24"	±0.05mm	18mm	56mm	24mm	100mm	20mm	770mm

DIGITAL CALIPERS

DATA OUTPUT



1136-501

- Non waterproof
- Resolution: 0.01mm/0.0005"
- Button function: on/off, zero, mm/inch, ABS, data preset
- Battery CR2032
- Made of stainless steel
- Optional accessory: accessory set for large digital calipers (code **6145-500/6146-500B**, for calipers with c=24mm)

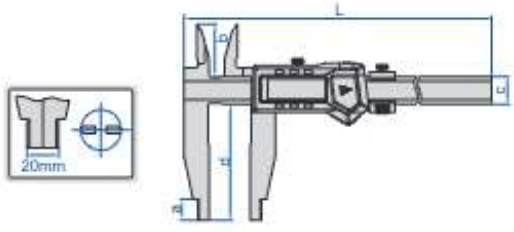

With data interface (optional wireless transmitter code 7315-22, receiver is needed page 7, for calipers with c=24mm or 31mm) (mm)

Code	Range	Accuracy	a	b	c	d	L
1136-301	0-300mm/0-12"	±0.05mm	18	45	24	100	420
1136-451	0-450mm/0-18"	±0.05mm	18	45	24	100	625
1136-501	0-500mm/0-20"	±0.05mm	18	45	24	100	675
1136-502	0-500mm/0-20"	±0.06mm	18	45	24	150	675
1136-503	0-500mm/0-20"	±0.06mm	24	60	31	200	675
1136-601	0-600mm/0-24"	±0.05mm	18	45	24	100	770
1136-1002	0-1000mm/0-40"	±0.08mm	24	60	31	150	1220
1136-1502	0-1500mm/0-60"	±0.11mm	24	60	42	150	1780
1136-2002	0-2000mm/0-80"	±0.14mm	24	60	42	150	2290

Built-in wireless (receiver code 7315-2/3/6/7/8/9 is needed) (mm)

Code	Range	Accuracy	a	b	c	d	L
1136-301WL	0-300mm/0-12"	±0.05mm	18	45	24	100	420
1136-451WL	0-450mm/0-18"	±0.05mm	18	45	24	100	625
1136-501WL	0-500mm/0-20"	±0.05mm	18	45	24	100	675
1136-502WL	0-500mm/0-20"	±0.06mm	18	45	24	150	675
1136-601WL	0-600mm/0-24"	±0.05mm	18	45	24	100	770