DIGITAL HOOK DEPTH GAUGES

DATA OUTPUT



1142-150A



- Non waterproof
- Resolution: 0.01mm/0.0005"
- Buttons: on/off, set, mm/inch, preset (+, -)
- Automatic power off, move the digital unit to turn on power
- Battery CR2032
- Made of stainless steel

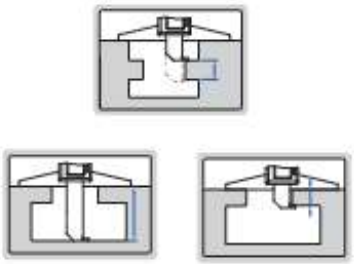

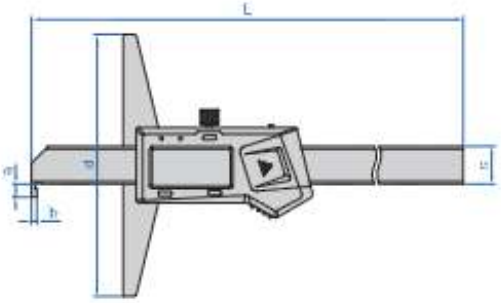

With data interface

Code	Range	Accuracy	L	d	a	b	c	Wireless transmitter (optional)
1142-150A	0-150mm/0-6"	±0.03mm	230mm	100mm	5mm	2mm	14.5mm	7315-25 (receiver is needed)
1142-200A	0-200mm/0-8"	±0.03mm	280mm	100mm	5mm	2mm	14.5mm	
1142-300A	0-300mm/0-12"	±0.04mm	380mm	150mm	5mm	2mm	14.5mm	
1142-500A	0-500mm/0-20"	±0.05mm	585mm	150mm	8mm	3mm	15mm	7315-22 (receiver is needed)
1142-5001A	0-500mm/0-20"	±0.05mm	585mm	200mm	8mm	3mm	15mm	
1142-1000A	0-1000mm/0-40"	±0.07mm	1188mm	150mm	10mm	4mm	18mm	
1142-10001A	0-1000mm/0-40"	±0.07mm	1188mm	200mm	10mm	4mm	18mm	
1142-10002A	0-1000mm/0-40"	±0.07mm	1188mm	250mm	10mm	4mm	18mm	

Built-in wireless (receiver code 7315-2/3/6/7/8/9 is needed)

Code	Range	Accuracy	L	d	a	b	c
1142-150AWL	0-150mm/0-6"	±0.03mm	230mm	100mm	5mm	2mm	14.5mm
1142-200AWL	0-200mm/0-8"	±0.03mm	280mm	100mm	5mm	2mm	14.5mm
1142-300AWL	0-300mm/0-12"	±0.04mm	380mm	150mm	5mm	2mm	14.5mm
1142-500AWL	0-500mm/0-20"	±0.05mm	585mm	150mm	8mm	3mm	15mm
1142-5001AWL	0-500mm/0-20"	±0.05mm	585mm	200mm	8mm	3mm	15mm
1142-1000AWL	0-1000mm/0-40"	±0.07mm	1188mm	150mm	10mm	4mm	18mm
1142-10001AWL	0-1000mm/0-40"	±0.07mm	1188mm	200mm	10mm	4mm	18mm
1142-10002AWL	0-1000mm/0-40"	±0.07mm	1188mm	250mm	10mm	4mm	18mm