DIGITAL HEIGHT GAUGES

DATA OUTPUT

- Non waterproof
- Resolution: 0.01mm/0.0005"
- Buttons: on/off, zero, mm/inch, ABS/INC, data hold, TOL, set
- ABS/INC is for absolute and incremental measurement
- TOL is for tolerance measurement
- Carbide tipped scriber
- Made of stainless steel (except the base)
- LR44 battery, data output
- Supplied with dial test indicator holder
- Supplied with dust cover (except **1150-1500/2000**)
- Optional accessory:
  wireless transmitter code **7315-1150** (receiver is needed) page 10,
  clamp for protractors (code **2372-CLAMP**, for **1150-300**)

4



1150-1000 **1150-500** **1150-300**

scriber (included)

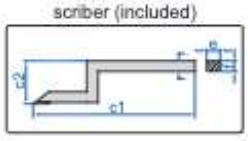

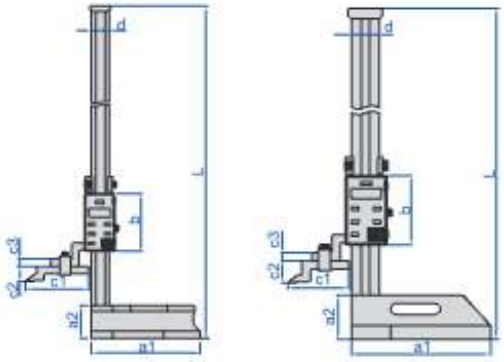

type A, type B type C

clamp for protractors (**optional**)
for **1150-300**

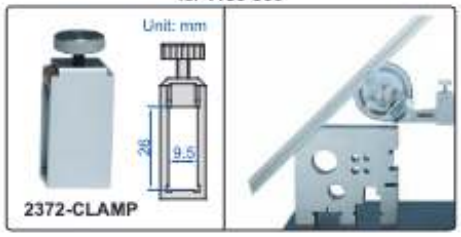

dial test indicator holder (included)

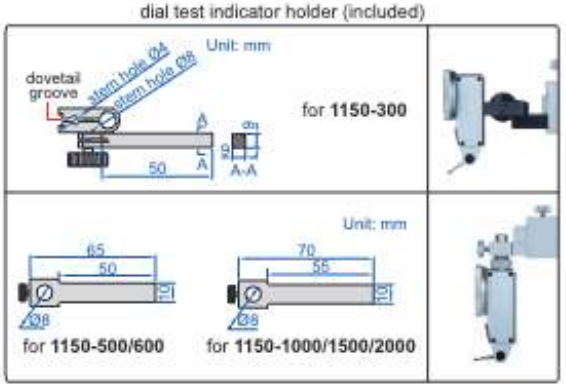

Code	Range	Type	Accuracy	L	a1	a2	b	c1	c2	c3	d	e	f
1150-300	0-300mm/0-12"	A	±0.04mm	485mm	138mm	45mm	95mm	80mm	30mm	10mm	28mm	9mm	9mm
1150-500	0-500mm/0-20"	B	±0.06mm	720mm	180mm	55mm	95mm	103mm	25mm	12mm	30mm	10mm	12mm
1150-600	0-600mm/0-24"	B	±0.06mm	820mm	180mm	55mm	95mm	103mm	25mm	12mm	30mm	10mm	12mm
1150-1000	0-1000mm/0-40"	C	±0.08mm	1275mm	250mm	80mm	125mm	110mm	39mm	15mm	50mm	10mm	15mm
1150-1500	0-1500mm/0-60"	C	±0.12mm	1790mm	280mm	80mm	125mm	110mm	39mm	15mm	50mm	10mm	15mm
1150-2000	0-2000mm/0-80"	C	±0.16mm	2290mm	280mm	80mm	125mm	110mm	39mm	15mm	50mm	10mm	15mm